SHER-001

SERVICE MANUAL

RV-6010R

AUDIO/VIDEO STEREO RECEIVER

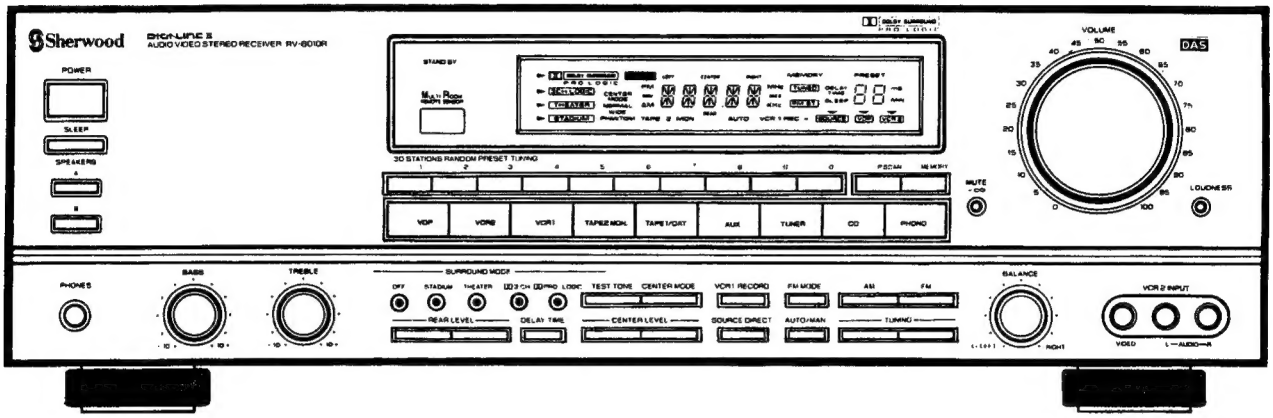

■ CONTENTS

Safety Precaution 2
Specifications 3
Alignment Procedures 5
Circuit Description 8
Block Diagram 13
P.C. Boards (Top & Bottom Views) 15
Wiring Diagram 25
Exploded View 27
Exploded View (Remocon Ass'y) 29
Electrical Parts List 30
Mechanical Parts List 40
Semiconductor Lead Identification & Internal Diagram 41
Schematic Diagram (I) 53
Schematic Diagram (II) 55
Schematic Diagram (III) 57
Schematic Diagram (IV) 59

Sherwood

Safety Precaution

WARNING

Service should not be attempted by anyone unfamiliar with the necessary precautions on this player. The following precautions are necessary during servicing.

1. Many electrical and mechanical parts in this player have special characteristics that often pass unnoticed and the protection afforded by them cannot necessarily be obtained by using replacement components rated for higher voltage, wattage, etc.
   Replacement parts that have these special safety characteristics are identified in this manual and its supplements: electrical components having such features are identified by a ⚠ in the schematic diagram and the parts list.
   Before replacing any of these components, read the parts list in this manual carefully.
   The use of substitute replacement parts that do not have the same safety characteristics as specified in the parts list may create shock, fire, or other hazards.
2. Before returning the player to the customer, always perform an AC leakage current check on the exposed metal parts of the cabinet, such as terminals, screwheads, metal overlays, etc., to be sure the player is safe to operate without danger of electrical shock. Plug the AC line cord directly into a 120V AC outlet **(120V Version only)**. (Do not use a line isolation transformer during this check.) Use an AC voltmeter having 5000 Ω per volt or more sensitivity in the following manner:
   Connect a 1500 Ω 10 watt resistor paralleled by a 0.15μF, 150V AC capacitor, between a known good earth ground (water pipe, conduit, etc.) and the exposed metal parts, one at a time. Measure the AC voltage across the combination of 1500 Ω resistor and 0.15μF capacitor. Reverse the AC plug at the AC outlet and repeat AC voltage measurements for each exposed metal part. Voltage measured must not exceed 0.3 volts RMS. This corresponds to 0.2mA AC. Any value exceeding this limit constitutes a potential shock hazard and must be corrected immediately.

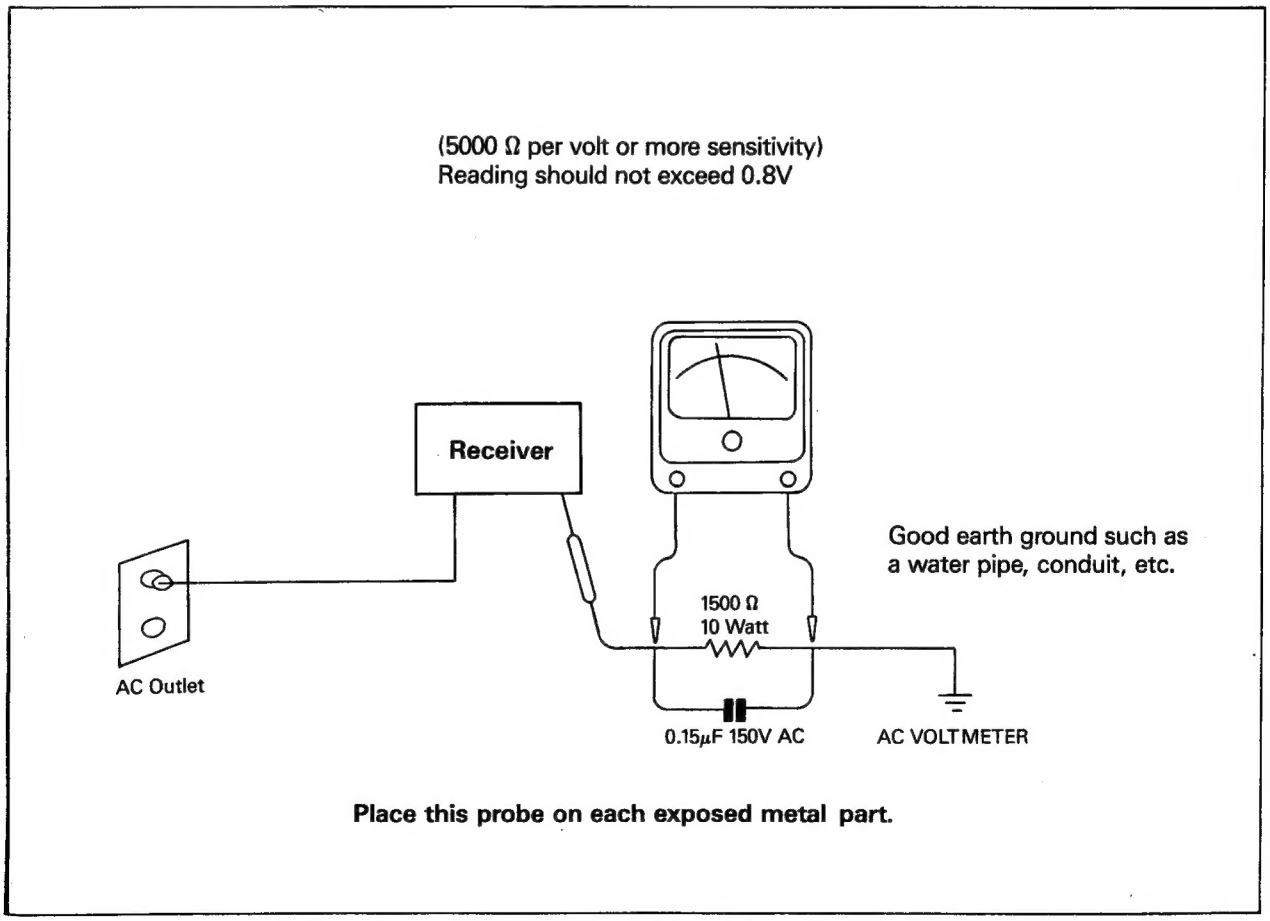

Specifications

Amplifier Section

Power Output Continuous RMS with no more than 0.05% THD.
- at 8 ohms, 20Hz-20kHz ..... 105W+105W
- at 4 ohms, 1kHz ..... 105W+105W

Rear Channel Power Output. 0.5% THD.
- at 8 ohms, 1kHz ..... 18W+18W

Center Channel Power Output. 0.05% THD.
- at 8 ohms, 1kHz 30W

Intermodulation Distortion, 60Hz:7kHz=4:1 SMPTE 100W output into 8 ohms 0.03%

Damping Factor at 1kHz, 8 ohms 70

Input Sensitivity for 100W output 8 ohms at 1kHz
- Phono 2.5mV
- Linear Inputs 150mV

Phono Input Overload at 1kHz, 0.1% THD. 140mV

Signal to Noise Ratio, IHF 'A' weighted/unweighted
- Phono 77/68dB
- Linear Inputs 100/86dB
- Rear Channels 75/73dB
- Center Channel 80/78dB

Frequency Response
- Phono, RIAA 30-20,000Hz ..... ±0.5dB
- Linear Inputs at 1W, −1.5dB 10Hz-100kHz
- Rear Channels at 1W, −3dB 80Hz-7kHz
- Center Channel at 1W, −3dB 30Hz-25kHz

Tone Control, BASS at 100Hz, TREBLE at 10kHz ..... ± 10dB

Loudness Contour
- at 100Hz ..... +6dB
- at 10kHz ..... +3dB

Channel Separation at Linear Input shorted
- at 100Hz 50dB
- at 1kHz 50dB
- at 10kHz 40dB

FM Section

Tuning Range ..... USA/Canada
87.50-107.90MHz
200kHz

Scanning Frequency Interval ..... Australia/Europe
(AUTO/MANUAL)
87.50-108.00MHz
50kHz

Usable Sensitivity IHF at S+N+D/N+D=30dB ..... 1.7μV(10.8dBf)

THD at 1kHz, 100% Mod, Mono 0.15%
Stereo 0.3%

Stereo Separation at 1kHz 45dB

Signal to Noise Ratio IHF, Mono 80dB
Stereo 73dB

Frequency Response 20Hz-15kHz ..... ± 1dB

Audio Output Voltage, 1kHz, 100% Mod 600mV

AM Section

Tuning Range ..... USA/Canada
520-1710kHz
10kHz
Scanning Frequency Interval ..... Australia/Europe
(AUTO/MANUAL) 522-1611kHz
9kHz
Usable Sensitivity IHF at S+N+/N=20dB, Loop antenna 400μV/m
Signal to Noise Ratio, 30% Mod 50dB
Audio Output Voltage, 400Hz, 80% Mod 500mV

General

Speaker Load Impedance 4–8Ω
Power Consumption:
North American Version ..... 230W (Pmax)
European Version ..... 560W (Pmax)
UK/Austalian Version ..... 560W (Pmax)
Multi-Voltage Version ..... 560W (Pmax)

Power Requirements;
A: 120V 60Hz for American/Canadian version
B: 120/220V, 60/50Hz for multi-voltage version(switchable)
C: 230V 50Hz for general Europian version
D: 230V 50Hz for Germanian/Italian version
E: 240V 50Hz for U.K/Austalian version
F: 230V 50Hz for Swiss/Scandinabian version

Dimension ..... 440(W)×140(H)×380(D)mm
17.3(W)×5.5(H)×14.9(D)inch
Weight(Net) ..... 13kg (28 lbs, 9.6ozs)

Note: Component and circuitry are subject to modification to insure best operation under differing local conditions. This manual is based on the American(A) standard, and provides information on regional circuit modification through use of alternate schematic diagrams or wiring diagram, and information on regional component variations through use of parts list. Design and specifications subject to change without notice for improvement.

Alignment Procedures

* Before making adjustment,operate the appliance for more than 2 minutes.
* Note: 1. 0 dB=1μV 2. FM 100% Mod.=75kHz Dev. 3. DVM=Digital Volt Meter
  4. SG=Signal Generator 5.SSG=Stereo Signal Generator

1. AM Adjustment

- Selector SW. ____ Tuner, AM
- In case of 2 band appliance(AM/FM).

No.	Subject	Feed Signal From	Feed Signal To	Setting Appliance	Measure Output	Adjust Point	Adjust For	Remark
1.	Tuning Voltage	520kHz		*1) 520kHz	Connect DVM to TP1	L102	DC 1.2±0.2V	
		1710kHz		*2) 1710kHz		TC102	DC 9.0±0.2V	1611kHz (8.6±0.2V)
		• Repeat the step *1) and *2) until DVM reads the tuning voltage mentioned above. • In case the freq. is 9kHz, the freq. of AM SG and appliance should be changed to *1) 522 kHz *2)1611 kHz						
2.	IF	AM IF Genescope	ANT.		Connect IF Genescope	L105 (IFT)	Symmetrical curve on AM IF Genescope	
3.	RF Tuning	*1) AM SG 600kHz, 74dB 400Hz (30% MOD.)	ANT.	600kHz	Output Connect AC Voltmeter & Oscilloscope	L101	Maximize audio output	AM SG. Test Loop ANT 60cm Appliance
		*2) AM SG 1400kHz, 74dB 400Hz (30% MOD.)	ANT.	1400kHz		TC101		
		• Feed Signal should be fed to Loop ant. through the TEST Loop ant., 60cm distant from the appliance • Repeat the step *1) & *2) until no further improvement occurs. • In case the freq. is 9kHz, the freq. of AM SG and appliance should be changed to *1) 603 kHz *2)1404 kHz						
4.	Tuned Level	AM SG 1000kHz, 80dB 400Hz (30% mod.)	ANT.	1000kHz		VR101	'Tuned' Light on	In FL Display
		• In case the freq. step is 9kHz, the freq. of AM SG and appliance should be changed to 999kHz.						

2. FM Adjustment

- Selector SW. ____ TUNER, FM (Mono/Stereo)
- Deviation _____ USA/CANADA (75 kHz Dev.)
  EUROPE (40 kHz Dev.)

No.	Subject	Feed Signal From	Feed Signal To	Setting Appliance	Measure Output	Adjust Point	Adjust For	Remark
1.	Tuning Voltage			87.50 MHz	Connect DVM to TP1		DC 2.0±0.2V	
				107.90 MHz			DC 8.8±0.2V	

No	Subject	Feed Signal From	To	Setting Appliance	Masure Output	Adjust Point	Adjust For	Remark
2.	IF	FM IF Genescope	ANT.	98MHz 60dB	TP2 & TP3 Connect IF Genescope	L103	Symmetrical S curve on FM IF Genescope	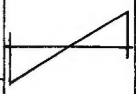
					TP2 & TP3 Connect DVM		DC 0±50mV	
				Detune	Connect Oscilloscope	L103	Maximize noise output	In case IF Genescope
					TP2 & TP3 Connect DVM		DC 0±50mV	is not available
3.	THD (Mono)	FM SG 98.10MHz, 60dB 1kHz (75kHz dev.	ANT.	98.10MHz Mono	*1) Output Connect DVM	L104	DC 0±0.05V	
					*2) Output Connect AC Voltmeter & Distortion Analyzer		Minimize distortion	
		• Adjust the step *1) 1st and the step *2) next and repeat until no further improvement occurs.						
4.	MPX (VCO)	FM SSG 98.10MHz, 60dB 1kHz (75kHz Dev.) Pilot 19kHz (9% Mod.)	ANT.	98.10MHz Mono	TP4 Connect freq. Counter	VR103	Read 76kHz	
		• Before adjustment, set the FM SSG to "Mod. OFF".						
5.	THD (Stereo)	FM SSG 98.10MHz, 60dB 1kHz (75kHz Dev.) Pilot 19kHz (9% Mod.)	ANT.	98.10MHz Stereo	Output connect AC voltmeter & distortion	Front- End	Minimize distortion	
6.	Mute Level	FM SSG 98.10MHz, 10μV (5μV for Europe) 1kHz(75kHz Dev.) (40kHz dev. for Europe)	ANT	98.10MHz Stereo	Output connect Oscilloscope	VR102	Muting occurs marginally	
7.	Separat- ion	*1) FM SSG 98.10MHz, 60dB 1kHz (75kHz, Dev) Pilot 19kHz (9% Mod) (Lch→Rch)	ANT	98.10MHz Stereo	R ch Mod connect AC voltmeter & distortion analyzer and oscilloscope	VR104	Minimize output	L ch mode
		*2) Same as above (Rch→Lch)			L ch Mod connect same as above		Minimize output	R ch mode
		• Repeat the step *1) and *2) until no further improvement occurs.						

Adjustment Point

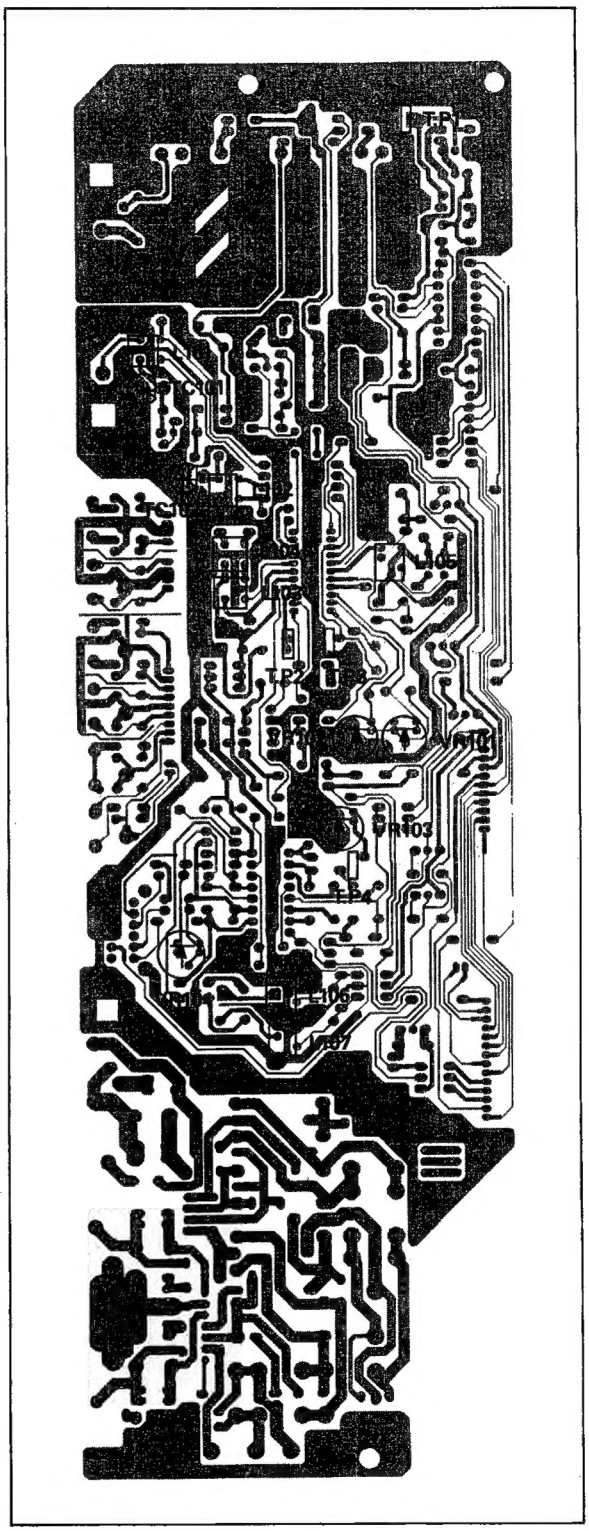

Circuit Description

Pin Assignment of μ — computer (IC 901: μPD75212)

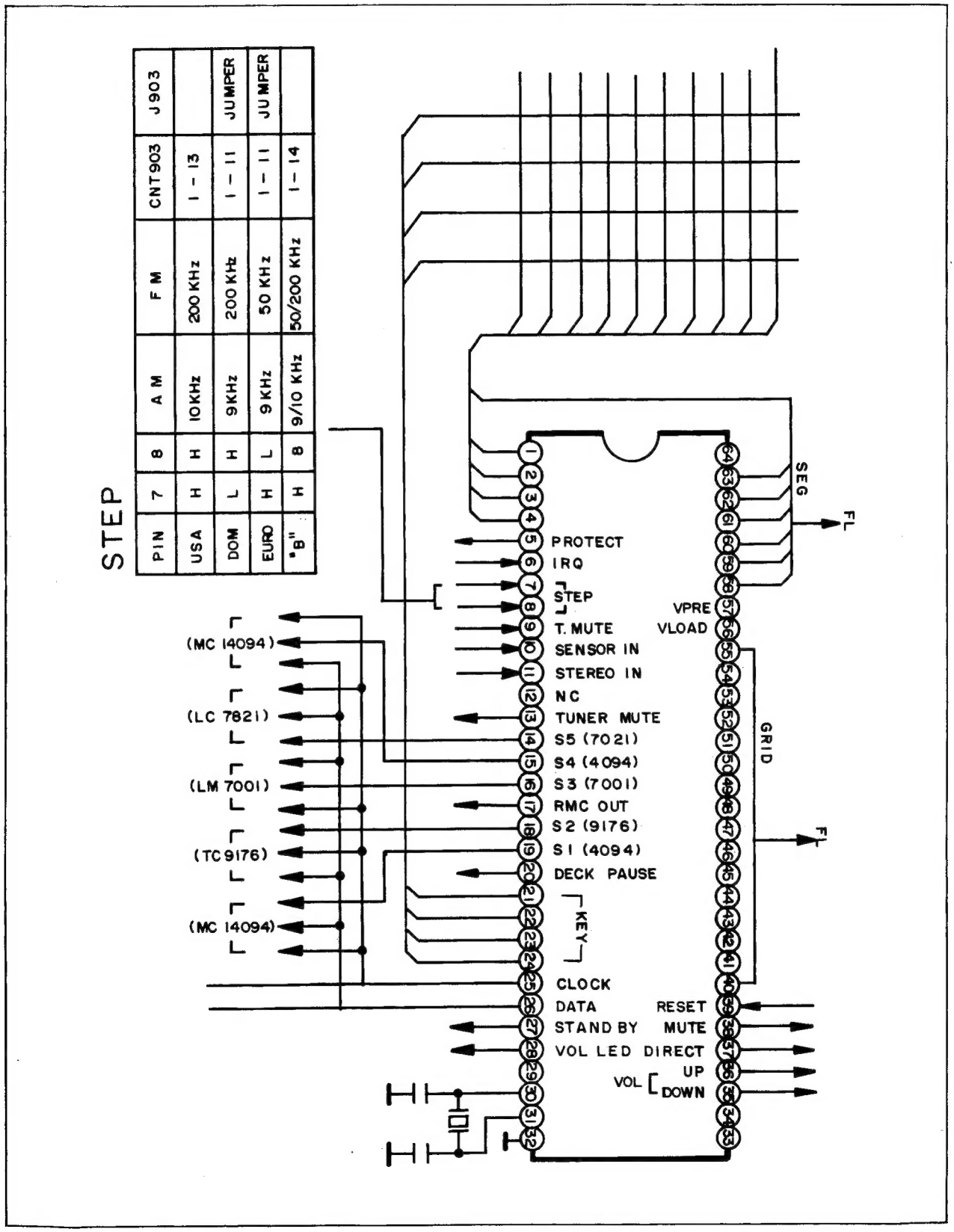

Functions Assigned (IC 901: μPD75212)

NO.	TERMINAL	OPERATING CHART	REMARKS
1	KEY MATRIX OUTPUT		S3
2	KEY MATRIX OUTPUT		S2
3	KEY MATRIX OUTPUT		S1
4	KEY MATRIX OUTPUT		S0
5	PROTECT		P01
6	IRQ	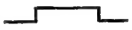	P02
7	STEP CHANGE		P03
8	STEP CHANGE		P04
9	TUNED		P10
10	SENSOR IN		P11
11	STEREO IN		P12
12	Nc		P13
13	TUNER MUTE	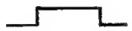	P20
14	STROBE		LC7821
15	STROBE		MC14094
16	STROBE (PLL)		LM7001
17	RMC OUT		
18	STROBE		TC9176
19	STROBE		MC14094
20	DECK PAUSE		
21	KEY MATRIX INPUT		
22	KEY MATRIX INPUT		
23	KEY MATRIX INPUT		
24	KEY MATRIX INPUT		
25	CLOCK		
26	DATA		
27	STAND BY	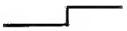	
28	VOL LED	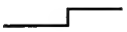	
29	Nc		
30	X1		4.19MHz
31	X0		4.19MHz
32	Vss		

NO.	TERMINAL	OPERATING CHART	REMARKS
33	Nc		
34	Nc		
35	DOWN(VOL)	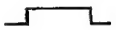	
36	UP(VOL)	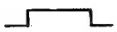	
37	DIRECT		
38	MUTE		
39	RESET		
40	T0		GRID
41	T1		GRID
42	T2		GRID
43	T3		GRID
44	T4		GRID
45	T5		GRID
46	T6		GRID
47	T7		GRID
48	T8		GRID
49	T9		GRID
50	S15		SEGMENT
51	S14		SEGMENT
52	S13		SEGMENT
53	S12		SEGMENT
54	S11		SEGMENT
55	S10		SEGMENT
56	VLOAD		
57	VPRE		
58	S9		SEGMENT
59	S8		SEGMENT
60	S7		SEGMENT
61	S6		SEGMENT
62	S5		SEGMENT
63	S4		SEGMENT
64	VDD		+5V

Internal Block Diagram (IC 901: μPD75212)

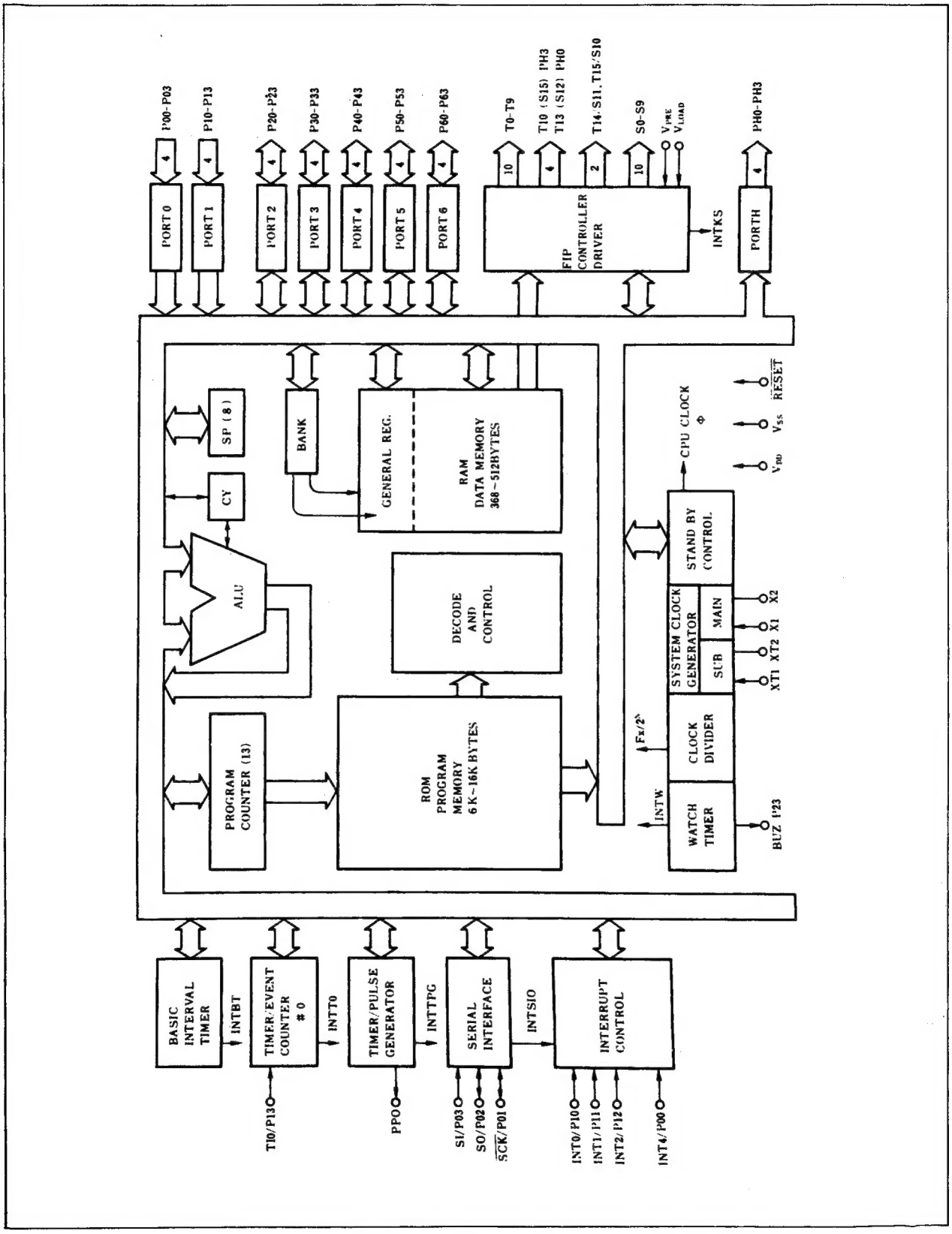

Key Matrix of Input & Output

	SPEAKER A	SPEAKER B		S11
CENTER DOWN	CENTER UP	CENTER MODE	TEST TONE	S10
VDP	PRESET SCAN	FM MODE	AUTO/ MANUAL	S9
VCR 2	VCR 1 REC	SOURCE DIRECT	MEMORY	S8
VCR 1	THEATER	3 CH	DELAY TIME	S7
DAT/TAPE 1	AM	FM	TUNE DOWN	S6
REAR UP	STADIUM	OFF	REAR DOWN	S5
AUX	SLEEP	POWER	DOLBY PRO LOGIC	S4
TAPE (2) MON	1	TUNE UP	6	S3
PHONO	MUTE	5	10	S2
CD	3	4	9	S1
TUNER	2	7	8	S0
	P63	P62	P61	P60

NOTES

Block Diagram

Model No.: RV-6010R

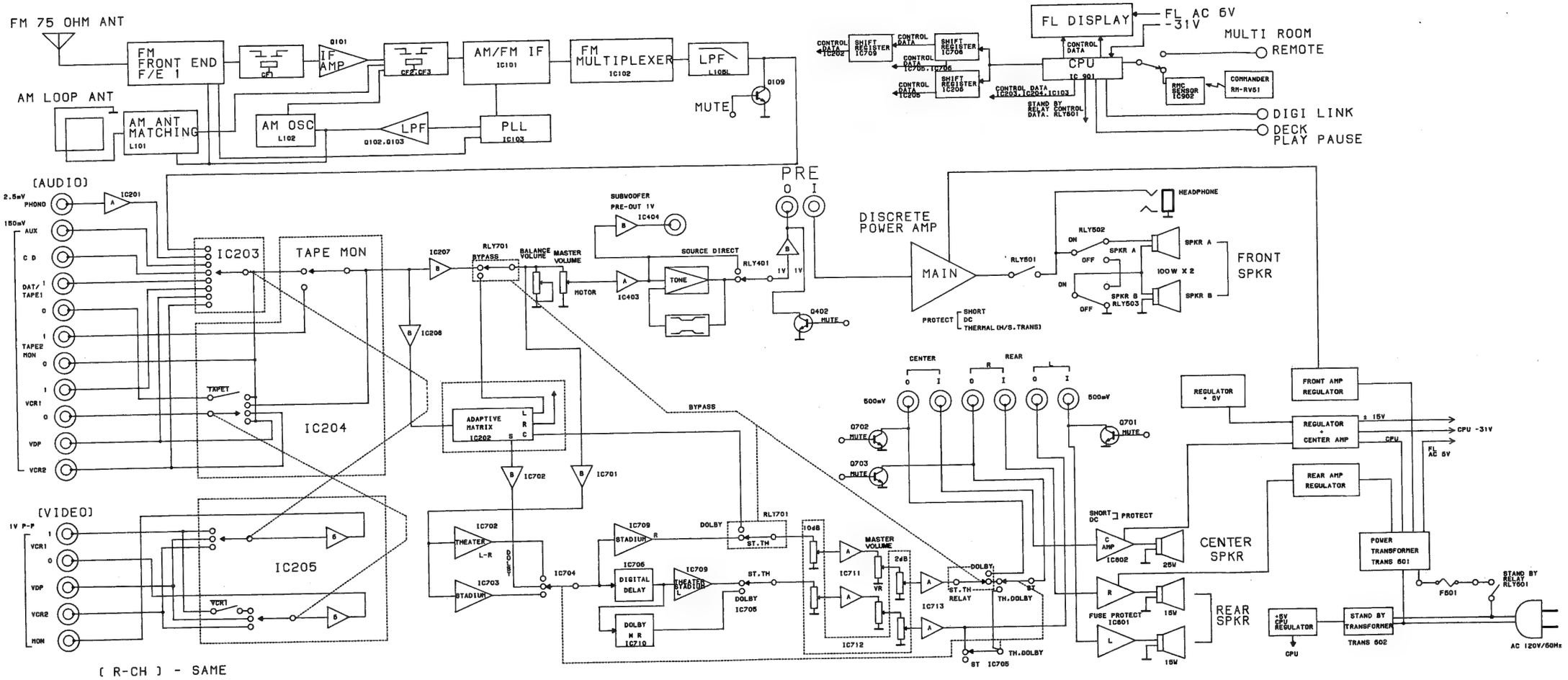

P.C. Boards (Top & Bottom Views)

MAIN P.C. BOARD

(TOP VIEW)

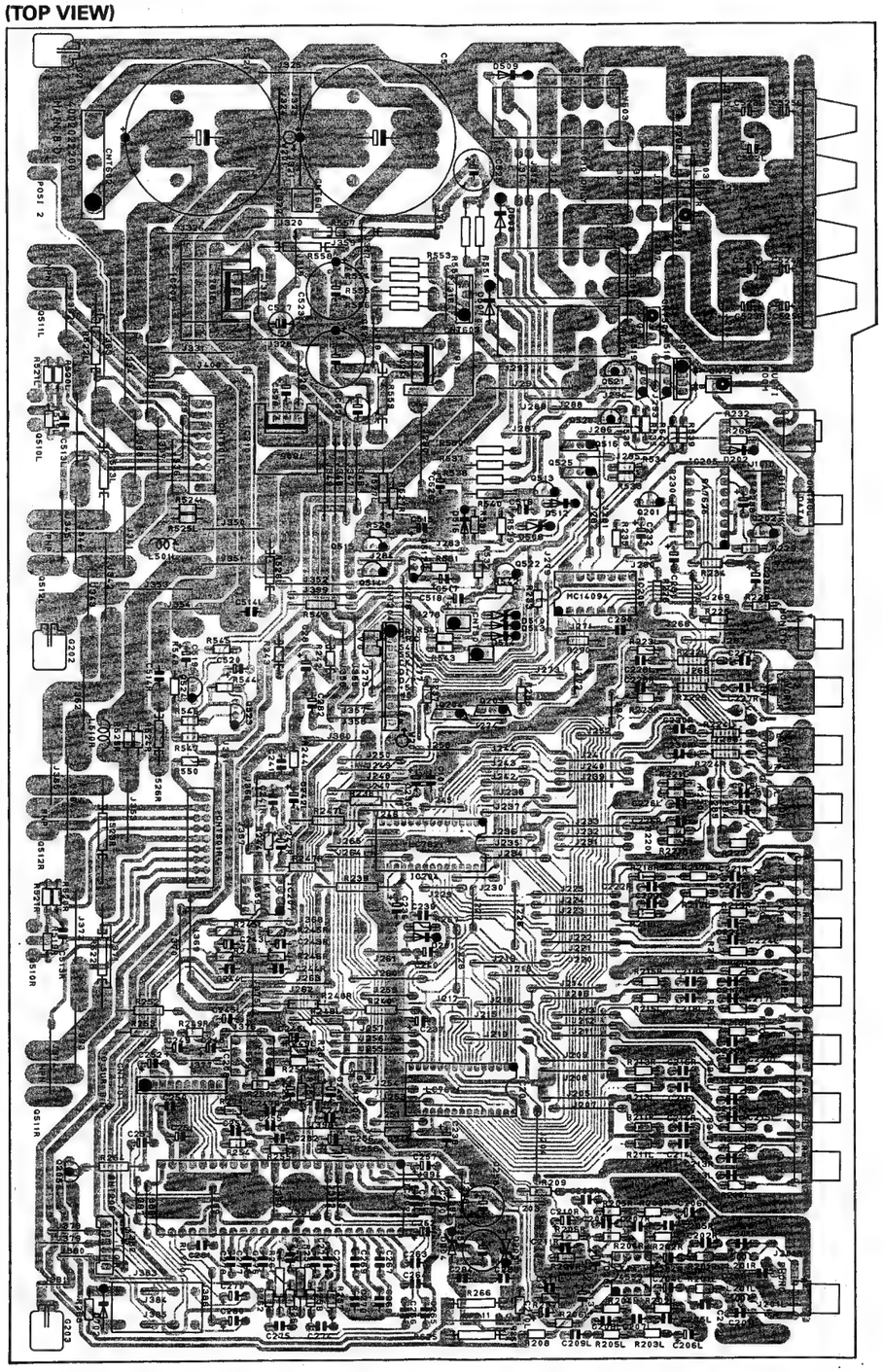

15

(BOTTOM VIEW)

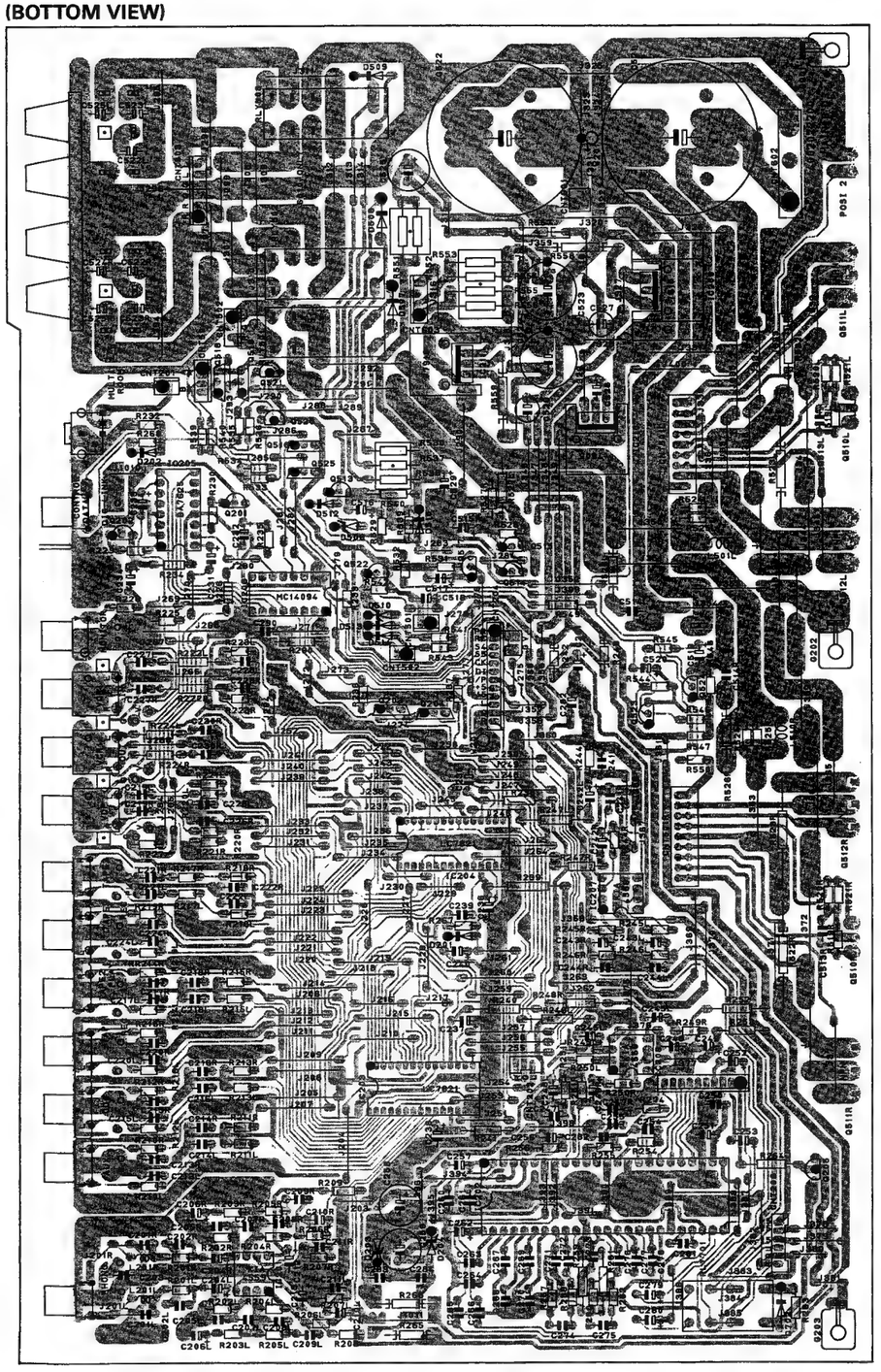

16

SURROUND P.C. BOARD

(TOP VIEW)

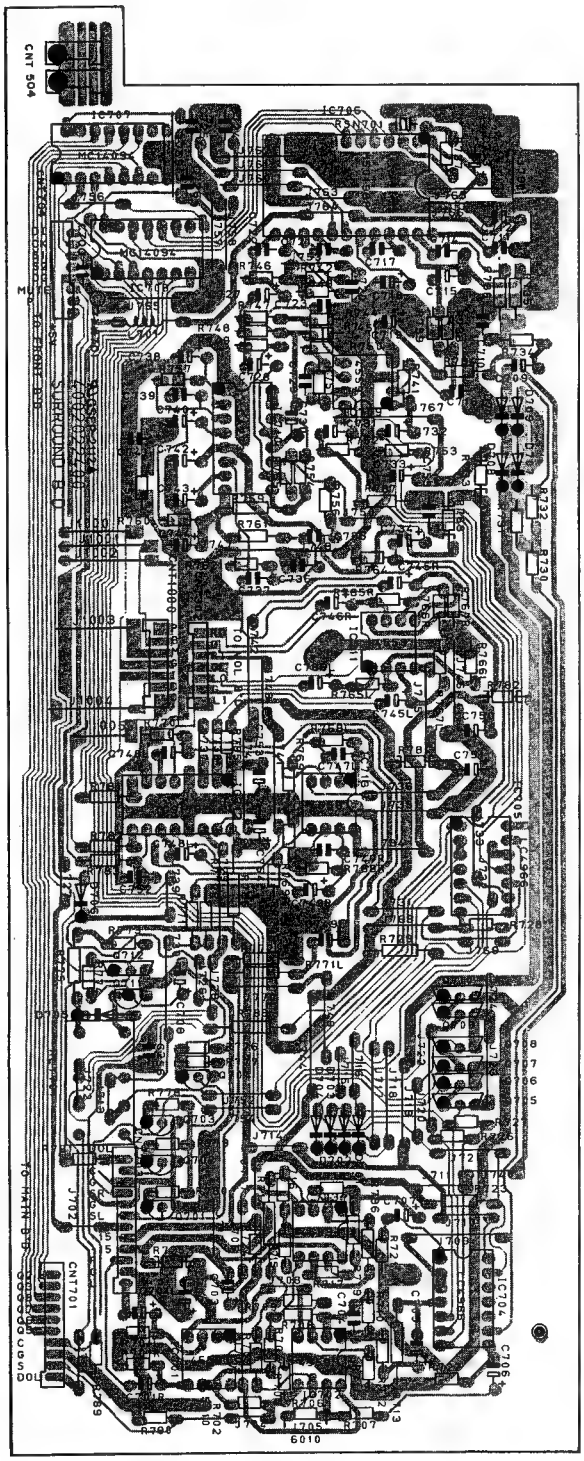

(BOTTOM VIEW)

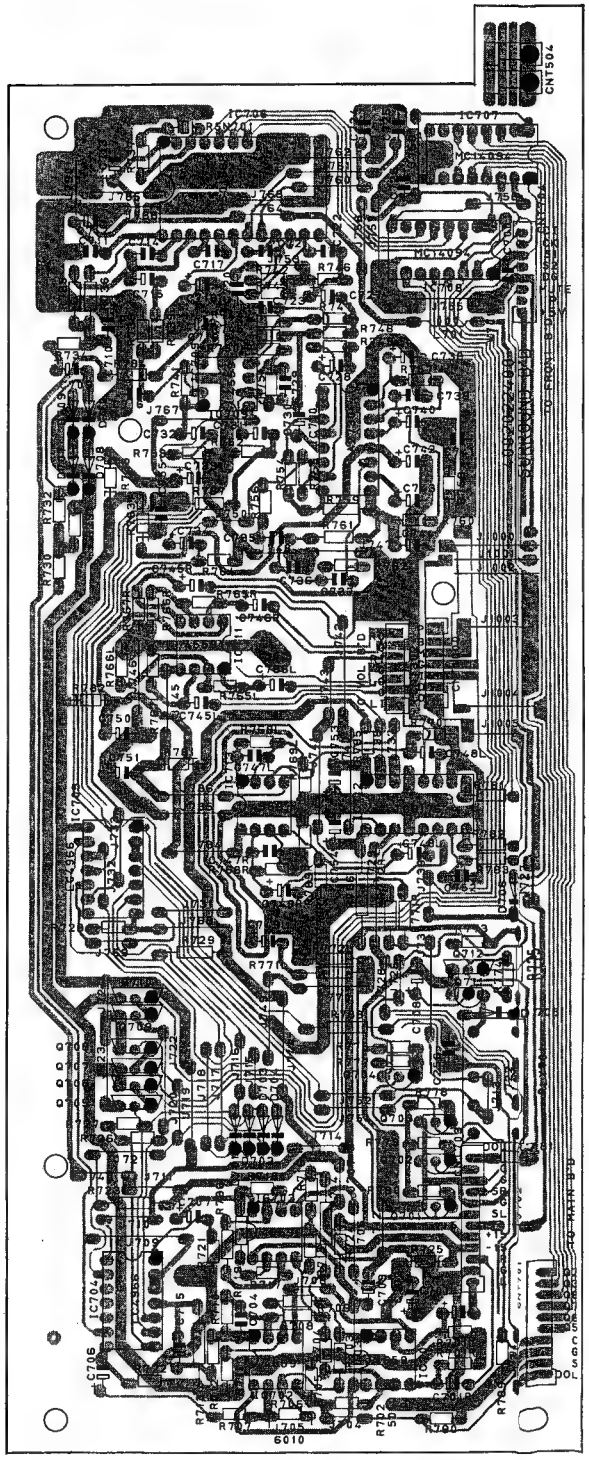

FRONT P.C. BOARD

(TOP VIEW)

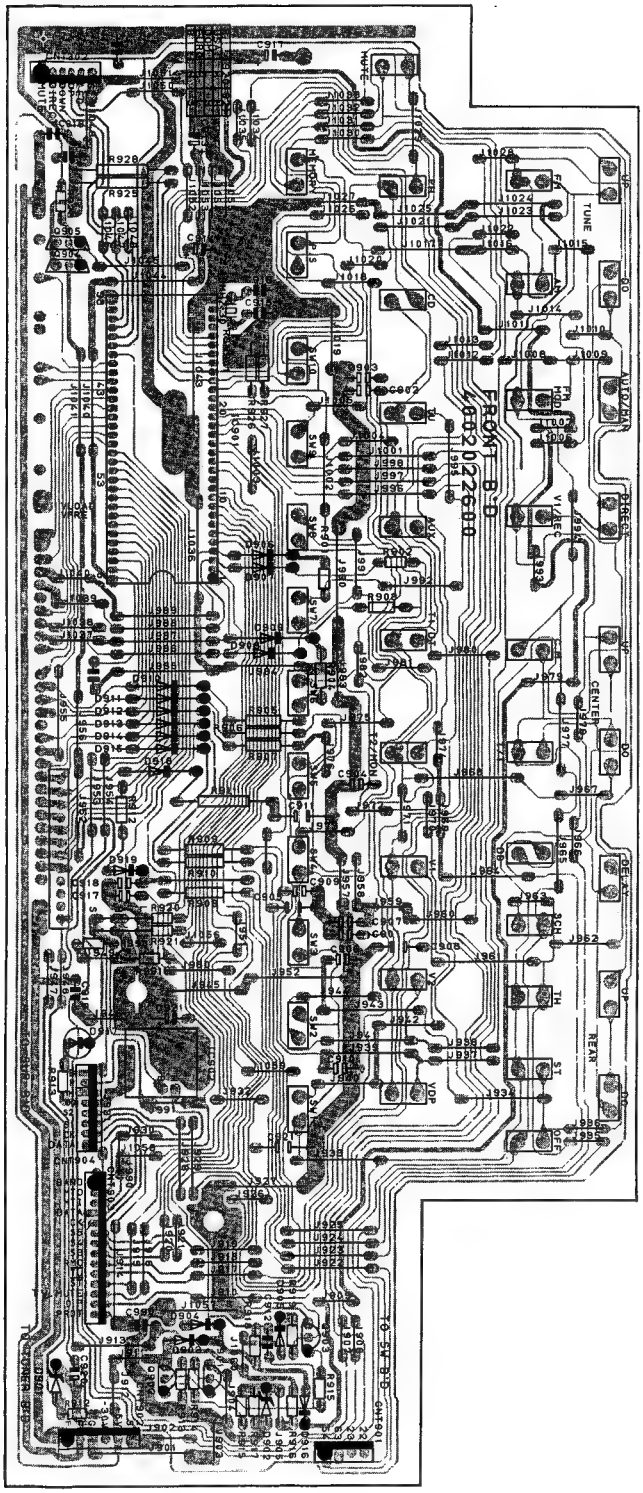

(BOTTOM VIEW)

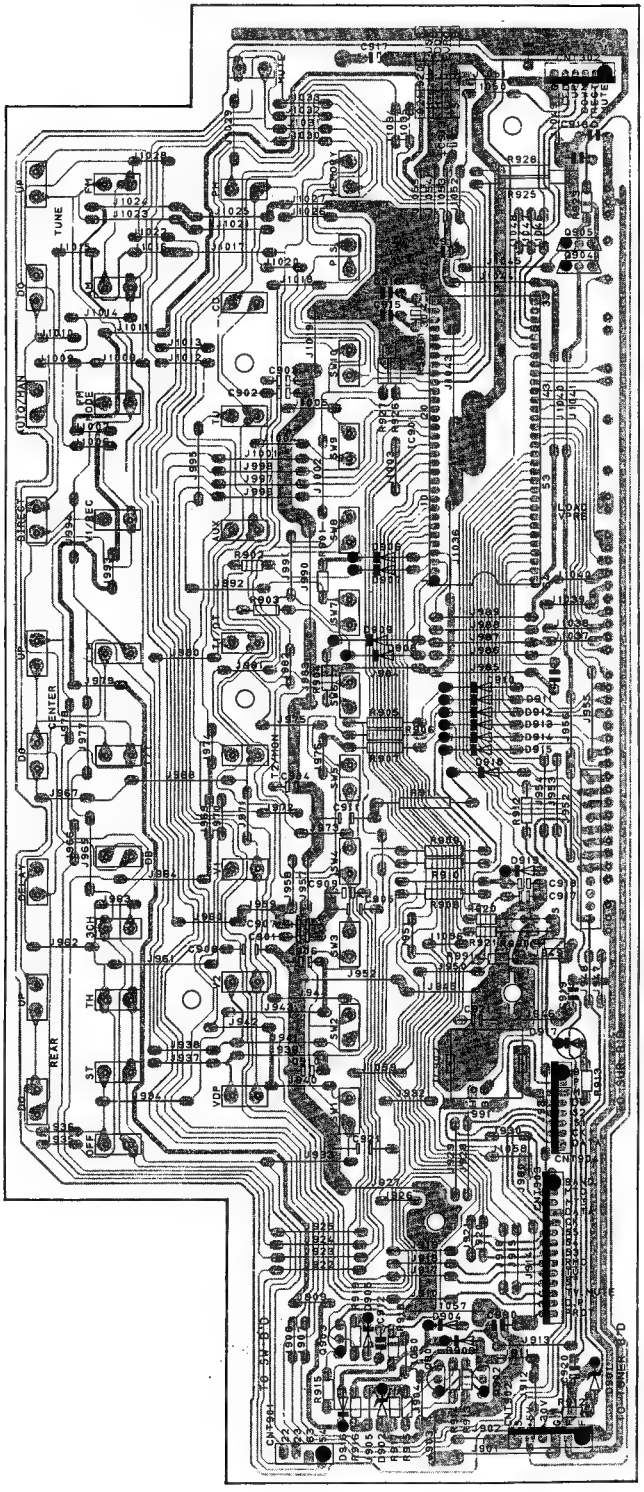

TUNER P.C. BOARD

(TOP VIEW)

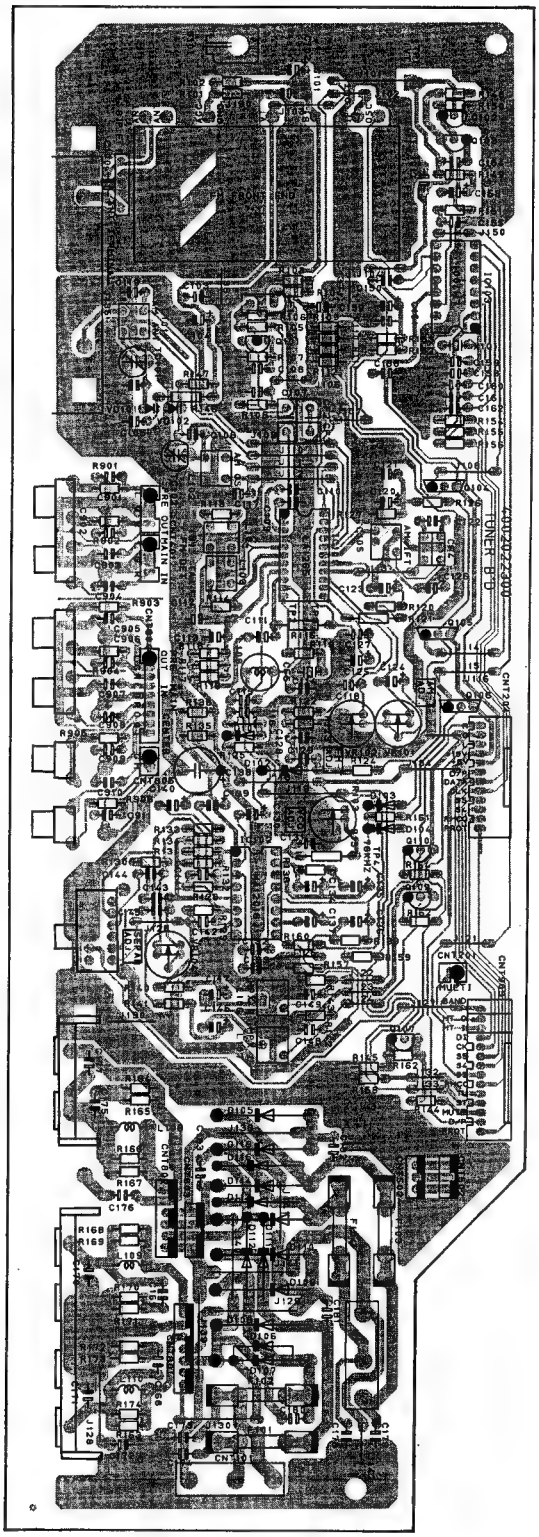

(BOTTOM VIEW)

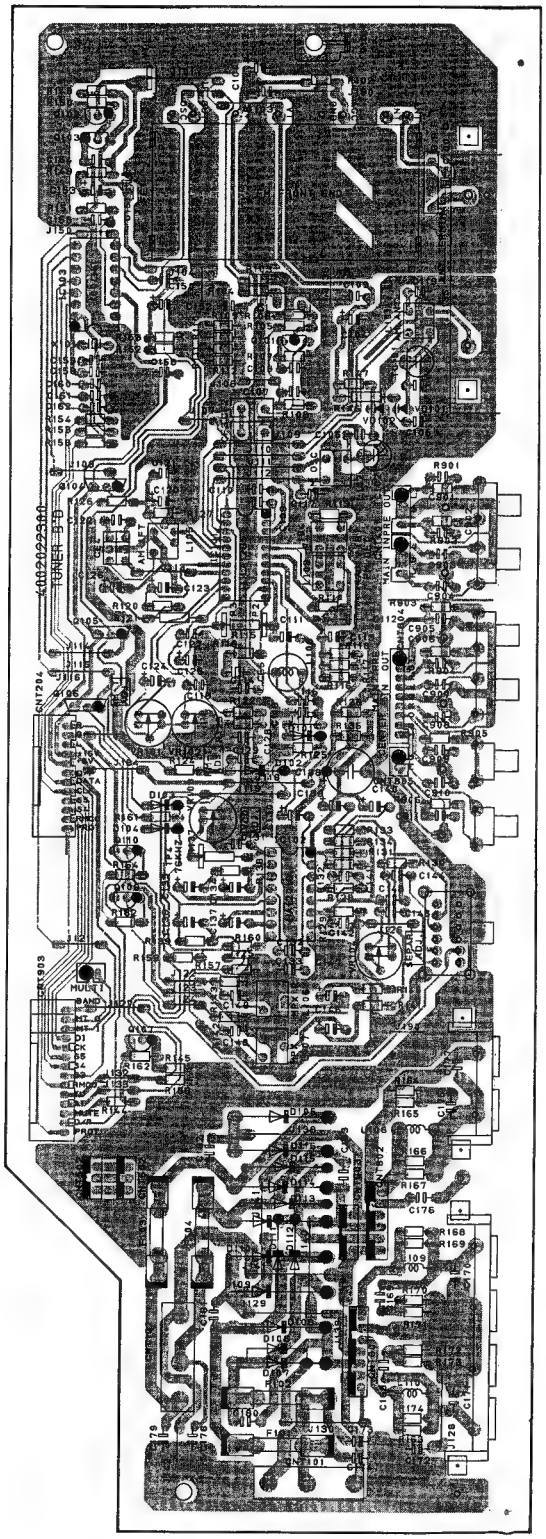

BOTTOM P.C. BOARD

(TOP VIEW)

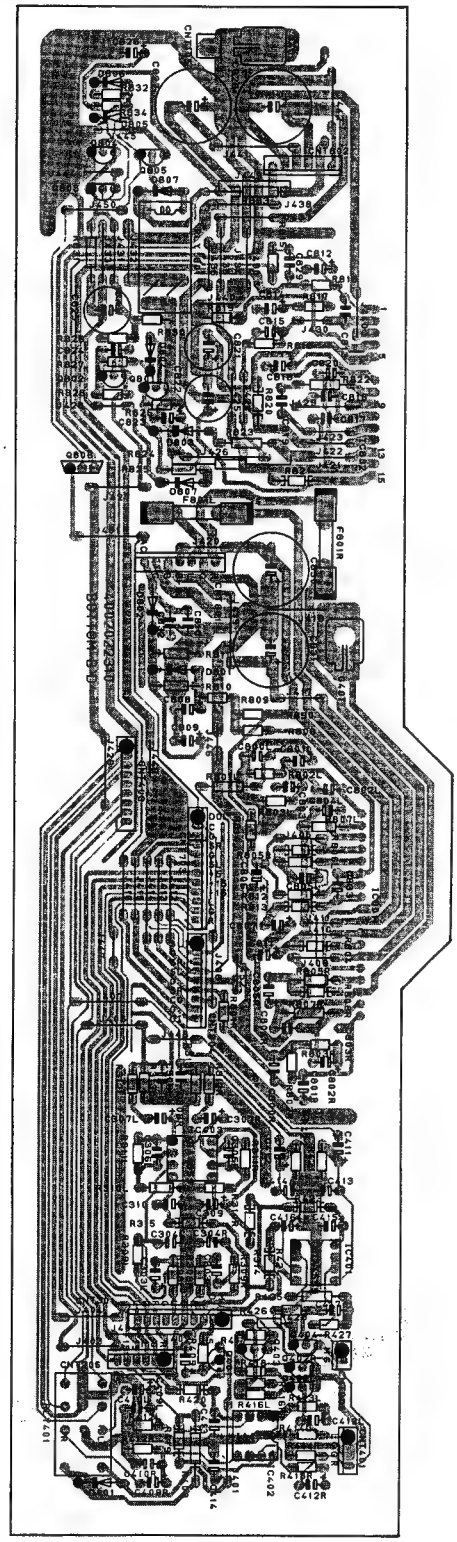

(BOTTOM VIEW)

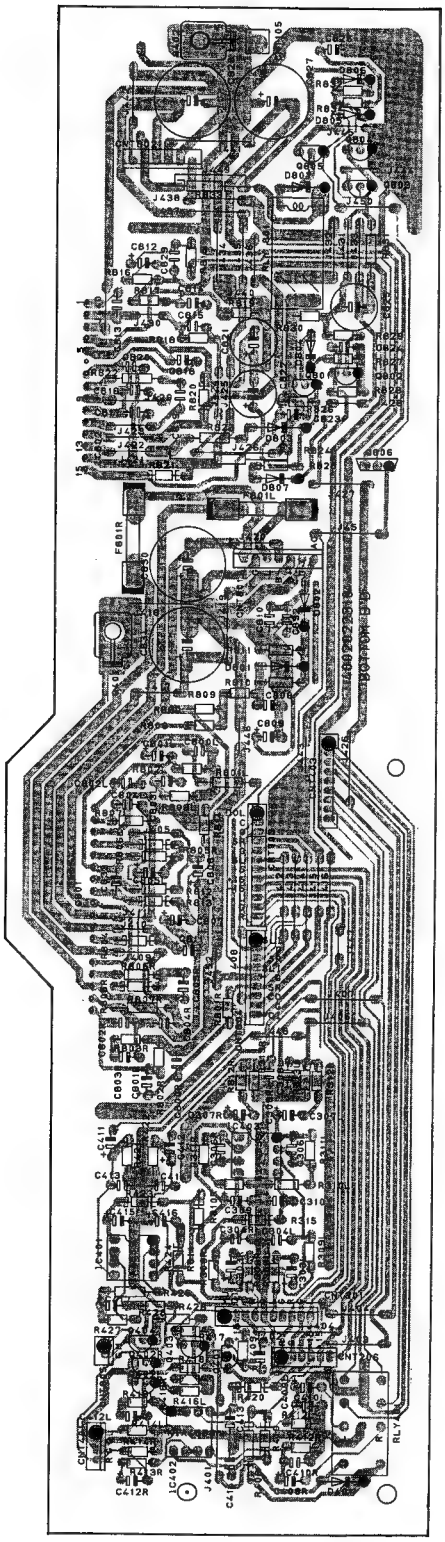

POWER P.C. BOARD

(TOP VIEW)

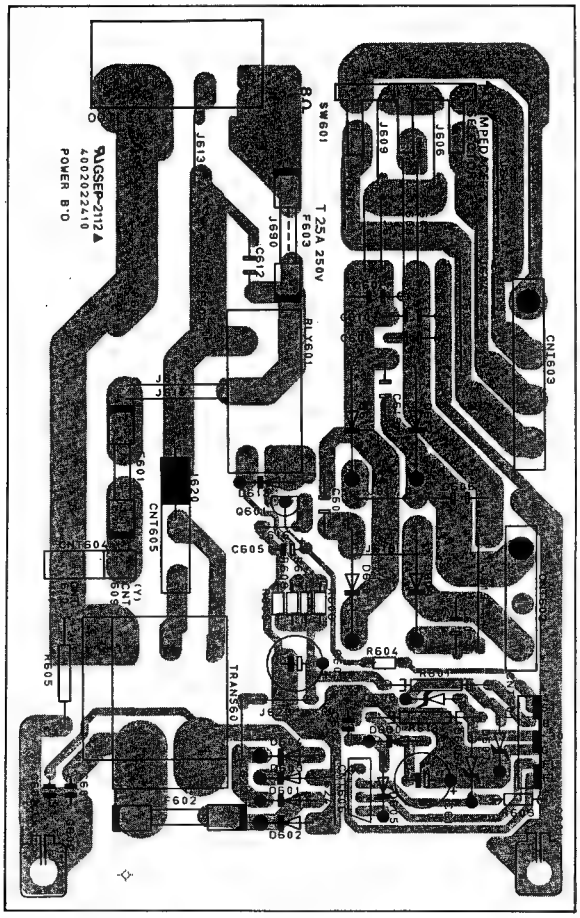

(BOTTOM VIEW)

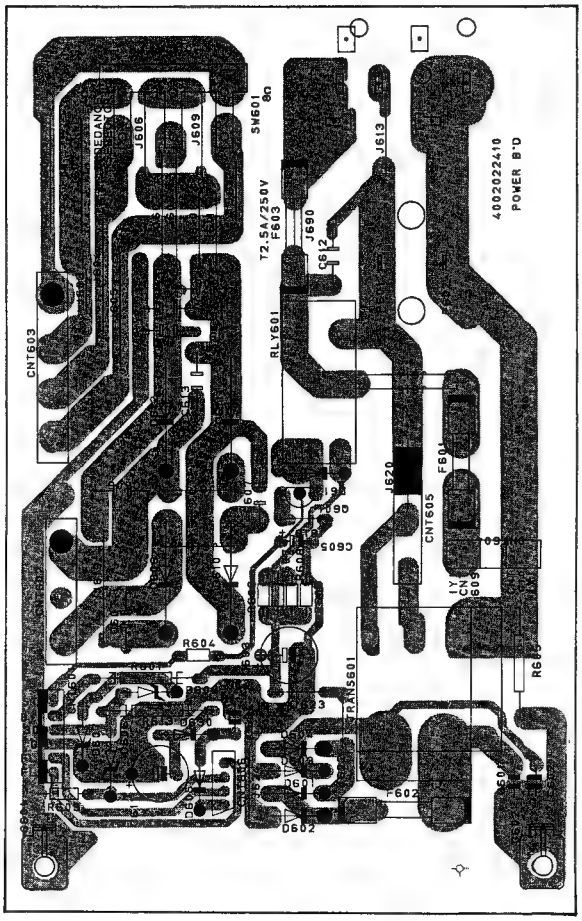

SELECTOR P.C. BOARD

(TOP VIEW)

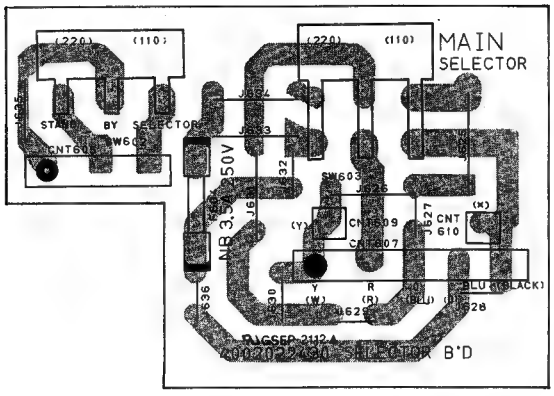

(BOTTOM VIEW)

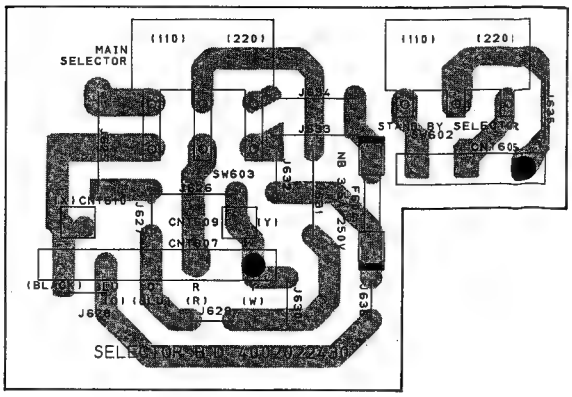

DRIVER P.C. BOARD

(TOP VIEW)

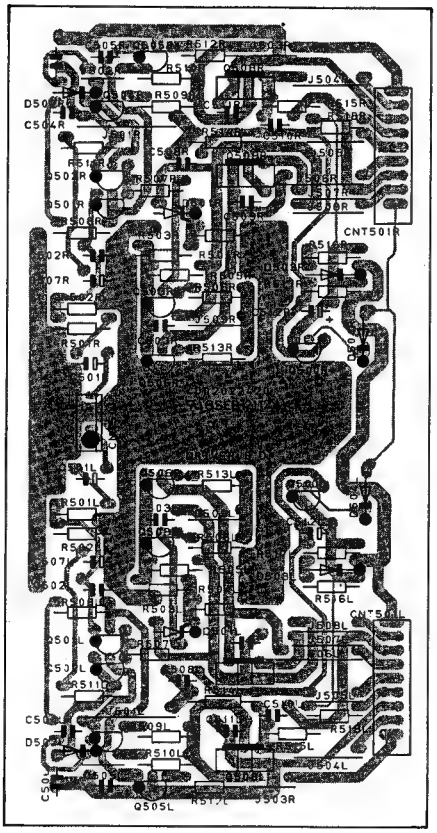

(BOTTOM VIEW)

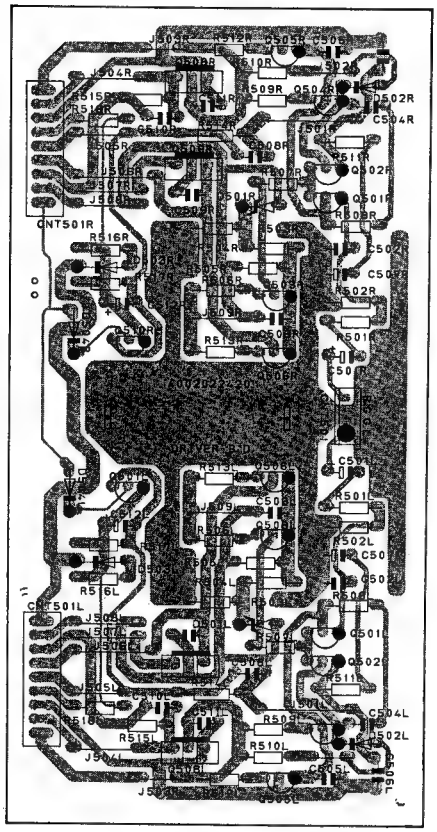

TONE P.C. BOARD

(TOP VIEW)

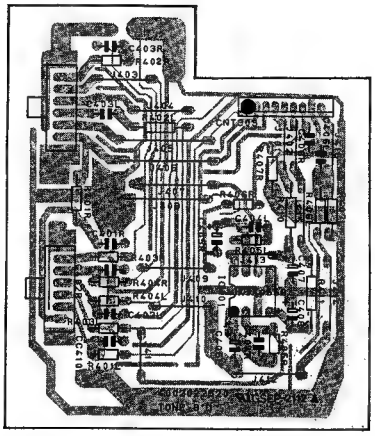

(BOTTOM VIEW)

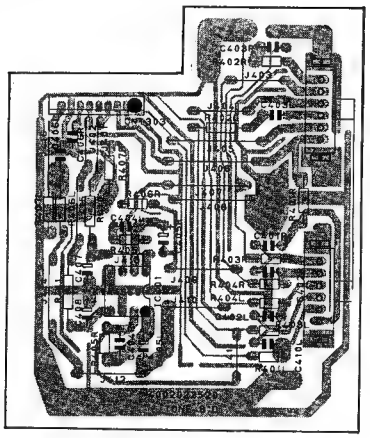

SW P.C. BOARD

(TOP VIEW)

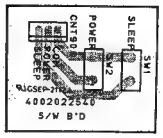

(BOTTOM VIEW)

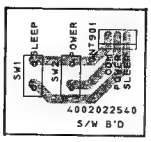

HEADPHONE P.C. BOARD

(TOP VIEW)

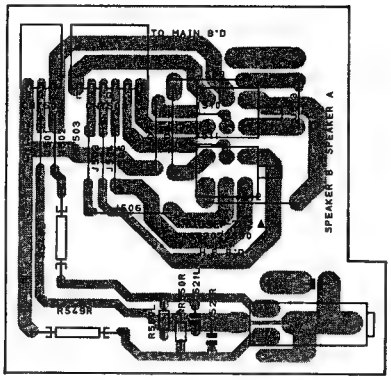

(BOTTOM VIEW)

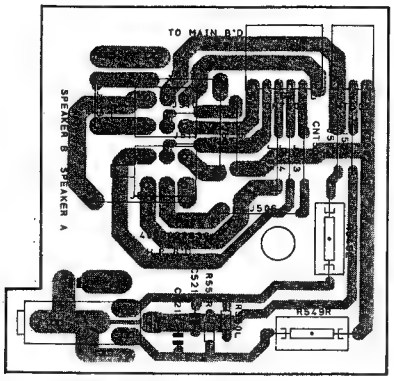

BALANCE P.C. BOARD

(TOP VIEW)

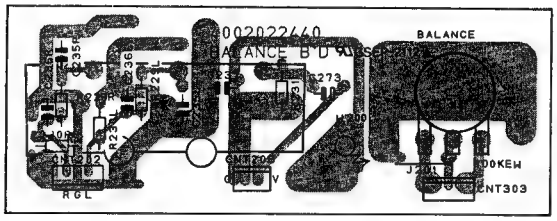

(BOTTOM VIEW)

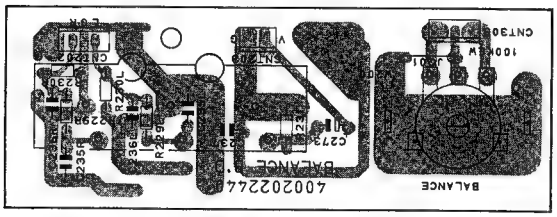

LED P.C. BOARD

(TOP VIEW)

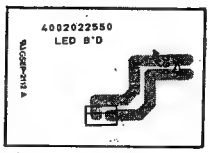

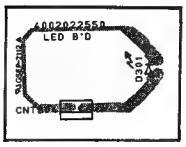

(BOTTOM VIEW)

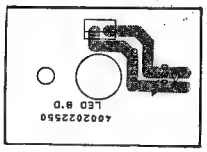

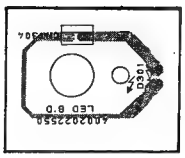

POSISTOR P.C. BOARD

(TOP VIEW)

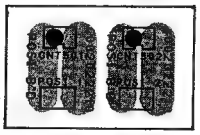

(BOTTOM VIEW)

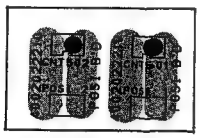

VOLUME P.C. BOARD

(TOP VIEW)

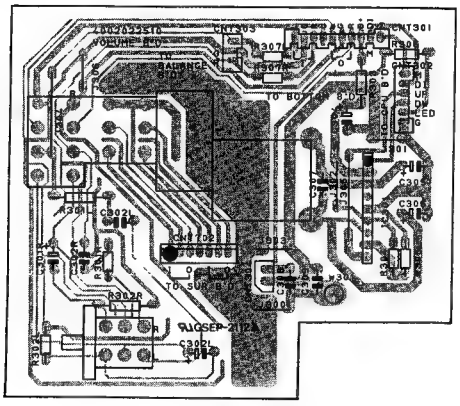

(BOTTOM VIEW)

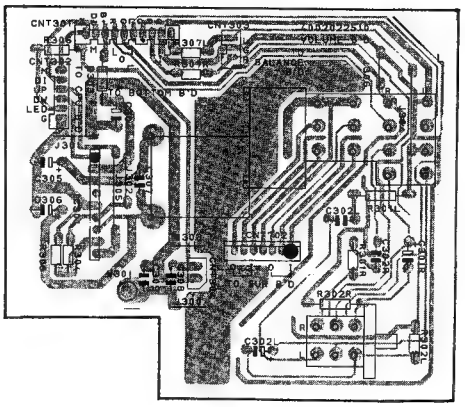

REMOCON P.C. BOARD

(TOP VIEW)

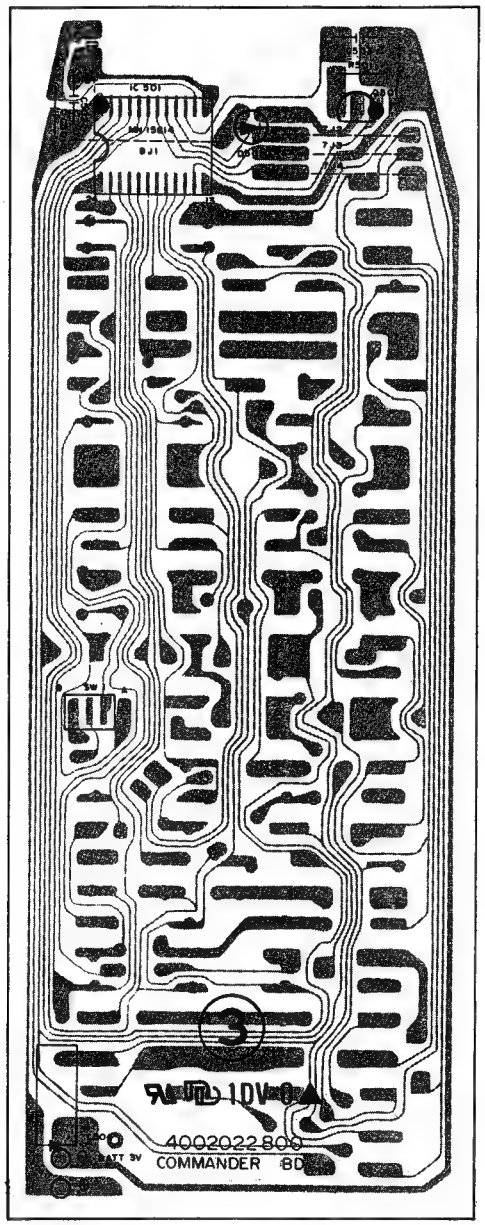

(BOTTOM VIEW)

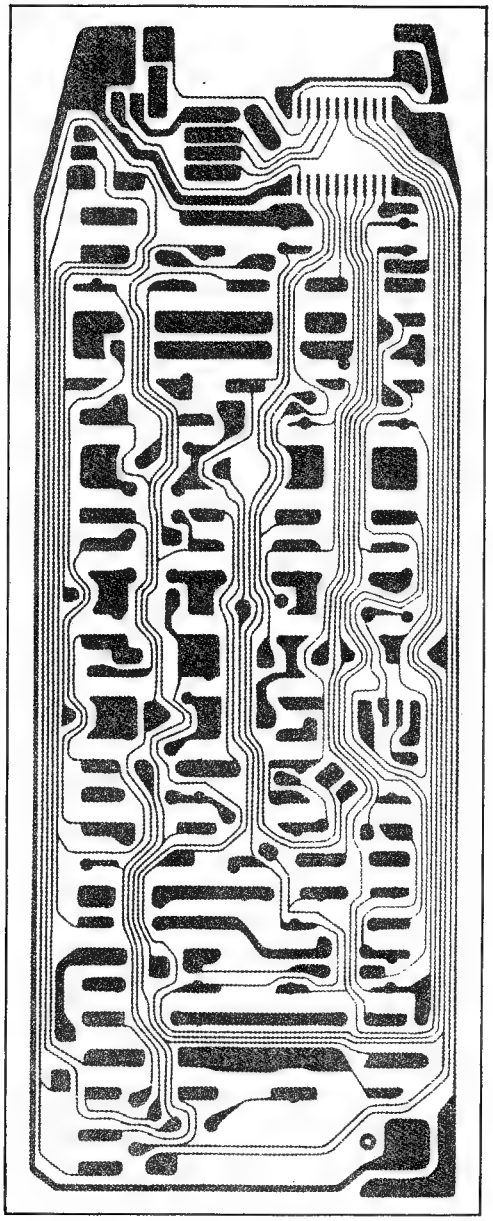

Wiring Diagram

Model No.: RV-6010R

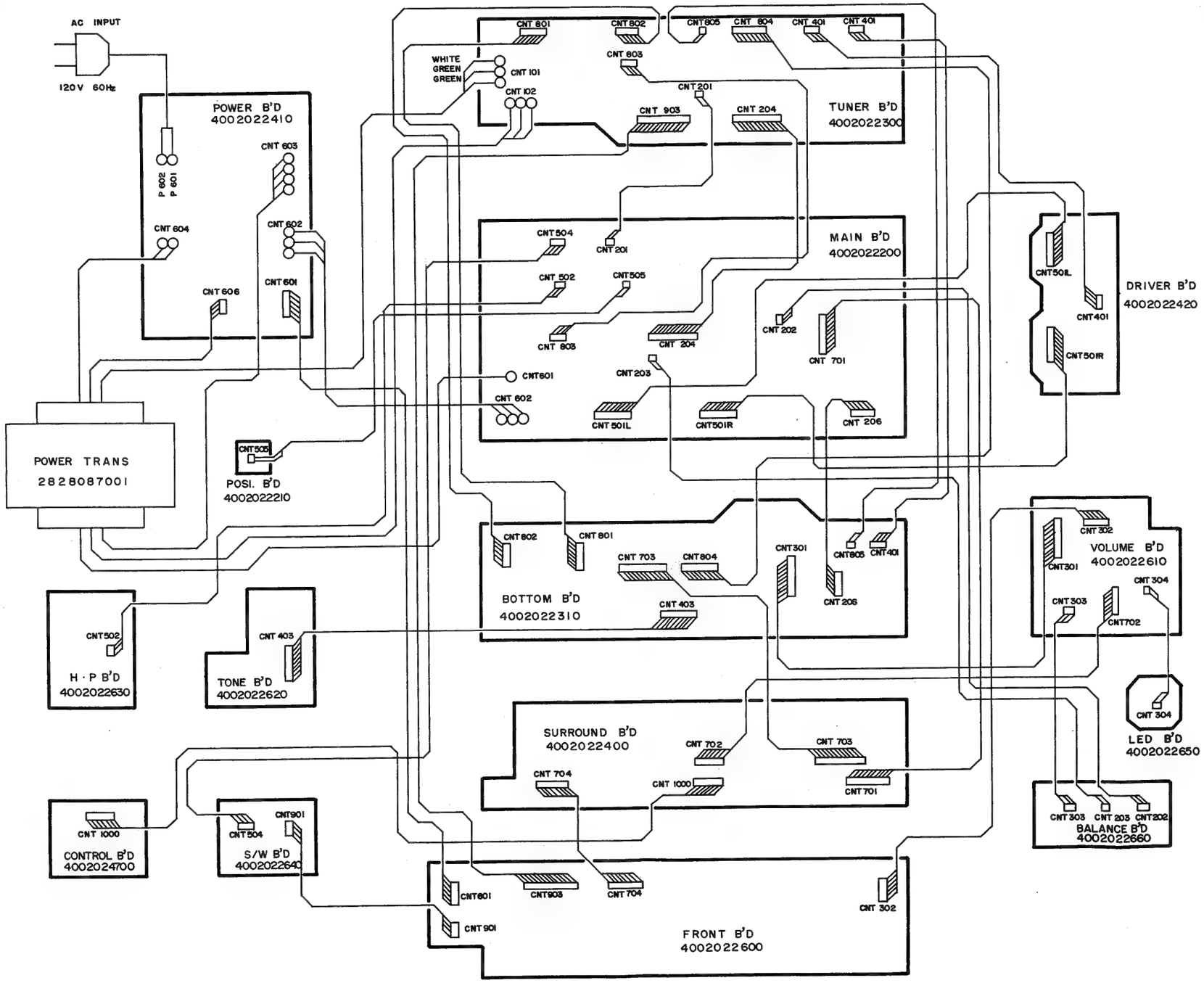

Exploded View

Model No.: RV-6010R

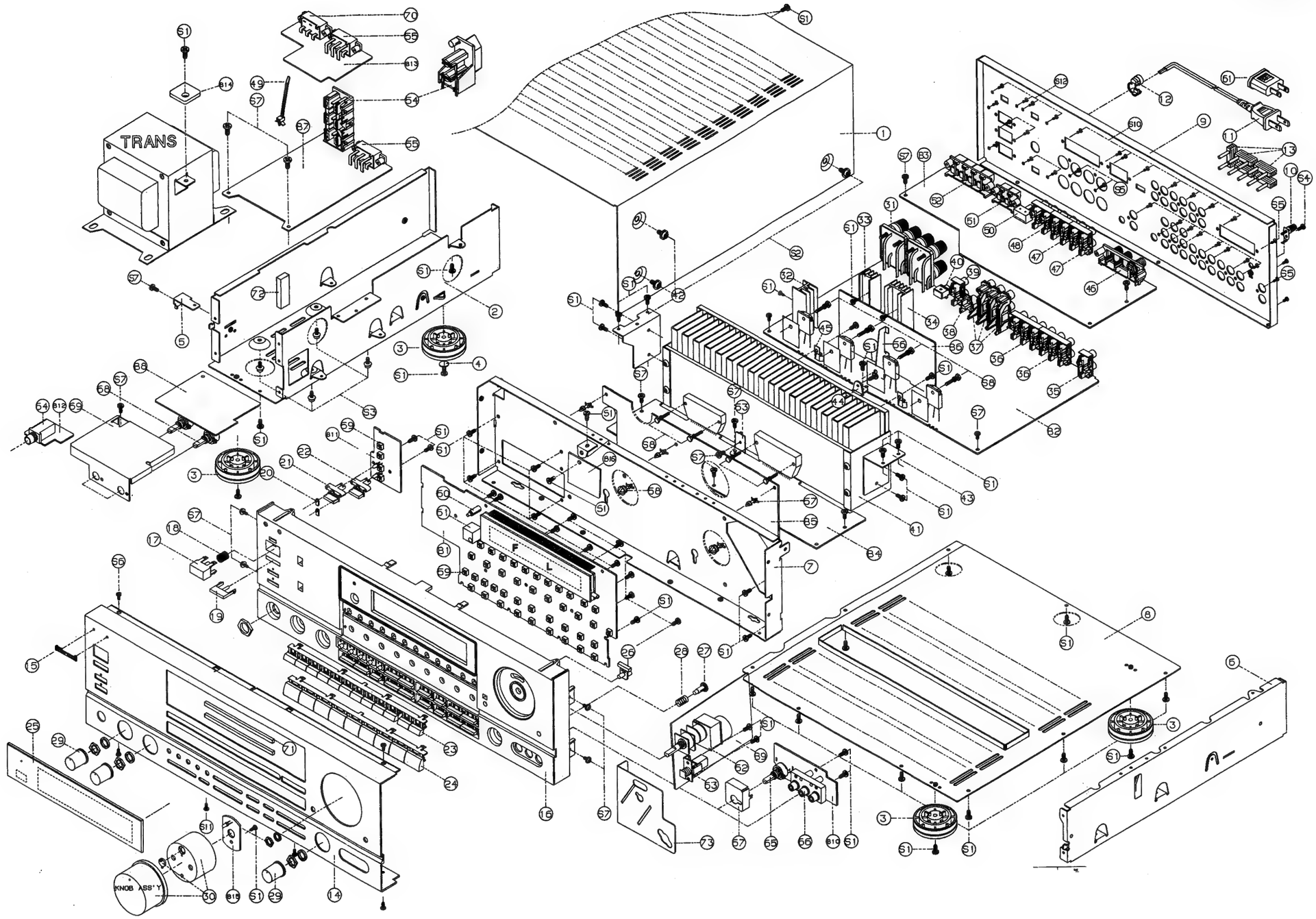

27

28

Exploded View *(Remocon Ass'y)*

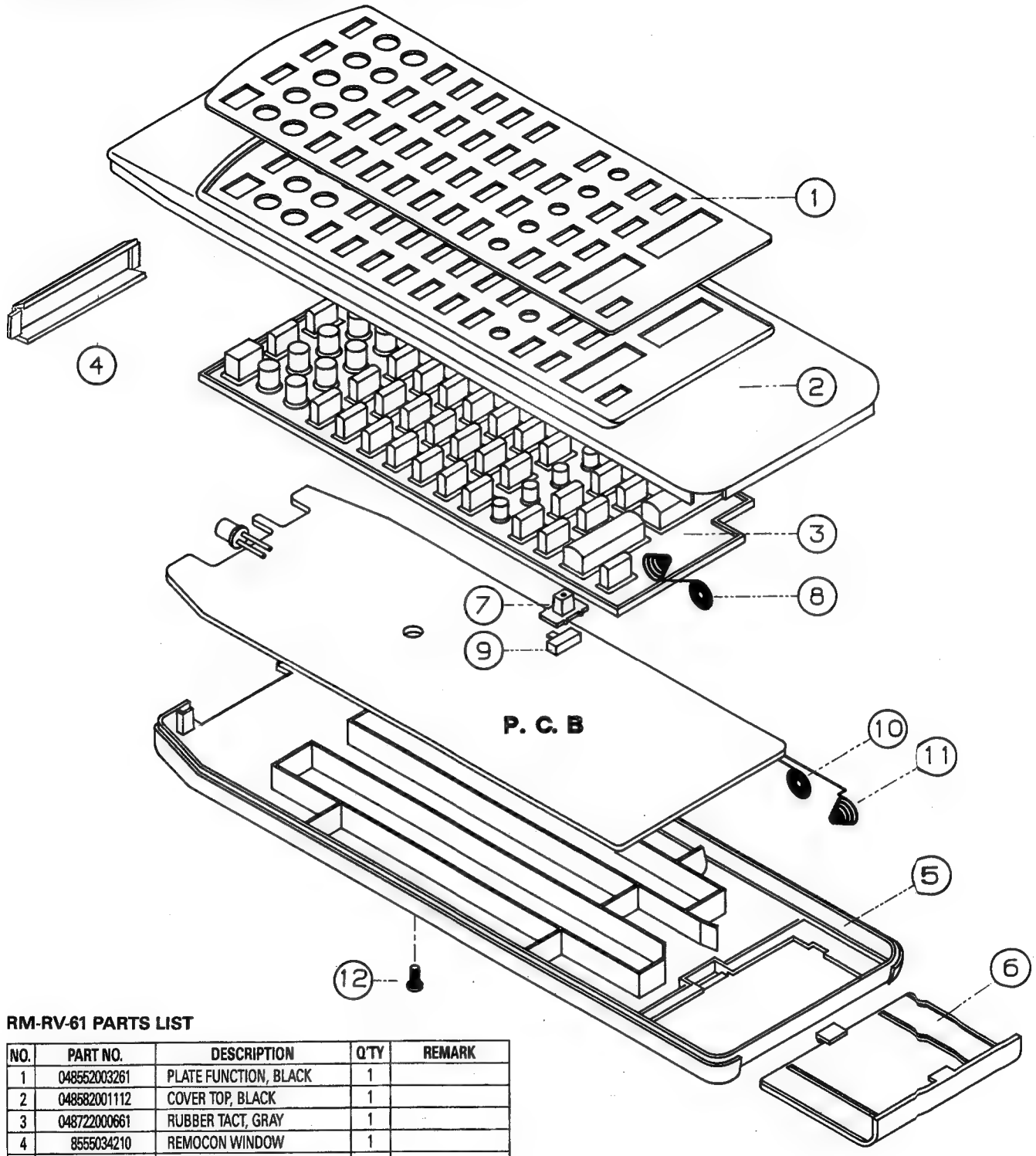

RM-RV-61 PARTS LIST

NO.	PART NO.	DESCRIPTION	Q'TY	REMARK
1	048552003261	PLATE FUNCTION, BLACK	1	
2	048582001112	COVER TOP, BLACK	1	
3	048722000661	RUBBER TACT, GRAY	1	
4	8555034210	REMOCON WINDOW	1	
5	8562001210	COVER BOTTOM, BLACK	1	
6	8583004410	COVER BATTERY, BLACK	1	
7	8545095910	KNOB SLIDE, BLACK	1	
8	6555605310	SPRING BATTERY (+, –)	1	
9	4618008110	SWITCH SLIDE	1	
10	6555009710	SPRING BATTERY (+)	1	
11	6555009810	SPRING BATTERY (–)	1	
12	8119620084	SCREW #2 PC2×8 ZNN	1	

Electrical Parts List

PRODUCT SAFETY NOTICE: If you replace any of these components, carefully read the product safety notice of this manual. Don't degrade the safety of the product through improper servicing. Remark meaning for version, so refer to power requirement of Specifications in this manual. Resistors & Capacitors tolerance; D: (±0.5%), J: (±5%), K: (±10%), M: (±20%), Z: (+80%, −20%).

Ref. No.	Part No.	Description				Remark
Main P.C. Board						
Capacitors						
C201L/R	3579101130	Ceramic	100pF	50V	J	D
C202L/R	3579101130	Ceramic	100pF	50V	J	
C203	3579473530	Ceramic	0.047pF	50V	J	
C204L/R	3479247971	Electric SA	4.7μF	50V	M	
C205L/R	3579100030	Ceramic	10pF	50V	J	
C206L/R	3479210071	Electric SA	10μF	50V	M	
C207L/R	3579222530	Ceramic	2200pF	50V	J	
C208L/R	3679182120	Mylar	0.0018μF	100V	J	
C209L/R	3679562120	Mylar	0.0056μF	100V	J	
C210L/R	3479268871	Electric SA	0.68μF	50V	M	
C211L/R	3679562120	Mylar	0.0056μF	100V	J	
C212	3479347041	Electric SG	47μF	25V	M	
C213L/R-C218L/R	3579101130	Ceramic	100pF	50V	J	D
C219	·	Not used !				
C220L/R-222L/R	3579101130	Ceramic	100pF	50V	J	D
C223	·	Not used !				
C224L/R	3579101130	Ceramic	100pF	50V	J	D
C225	·	Not used !				
C226-C228	3579101130	Ceramic	100pF	50V	J	D
C229	·	Not used !				
C230L/R	3579101130	Ceramic	100pF	50V	J	D
C231	3479222971	Electric SA	2.2μF	50V	M	
C232	3479347121	Electric SG	470μF	10V	M	
C233	3479222971	Electric SA	2.2μF	50V	M	
C234	3479347121	Electric SG	470μF	10V	M	
C235	3479322071	Electric SG	22μF	50V	M	
C236	3479322041	Electric SG	22μF	25V	M	
C237/C238	3479322071	Electric SG	22μF	50V	M	
C239	3579103530	Ceramic	0.01μF	50V	J	
C240	3479210971	Electric SA	1μF	50V	M	
C241L/R	3579101130	Ceramic	100pF	50V	J	
C242L/R	3479210071	Electric SA	10μF	50V	M	
C243L/R	3479210071	Electric SA	10μF	50V	M	
C244L/R	3579222130	Ceramic	2200pF	100V	J	
C245	·	Not used !				
C246L/R	3479210071	Electric SA	10μF	50V	M	
C247L/R	3579101130	Ceramic	100pF	50V	J	
C248/C249	3479210071	Electric SA	10μF	50V	M	
C250	3679104297	Mylar	0.1μF	63V	J	
C251	3479310121	Electric SG	100μF	10V	M	
C252/C253	3479210071	Electric SA	10μF	50V	M	
C254/C255	3679210320	Mylar	0.01μF	100V	J	
C256	3479210071	Electric SA	10μF	50V	M	
C257	3479247971	Electric SA	4.7μF	50V	M	
C258	3479347121	Electric SG	470μF	10V	M	
C259	·	Not used !				
C260/C261	3679224297	Mylar	0.22μF	63V	J	
C262	3479247971	Electric SA	4.7μF	50V	M	
C263/C264	3679224297	Mylar	0.22μF	63V	J	
C265/C266	3679104297	Mylar	0.1μF	63V	J	
C267-C270	3679334297	Mylar	0.33μF	63V	J	
C271	3579681130	Ceramic	680pF	50V	J	
C272	3679223120	Mylar	0.022μF	100V	J	
C273	3579681130	Ceramic	680pF	50V	J	
C274/C275	3679104297	Mylar	0.1μF	63V	J	
C276-C278	3679223120	Mylar	0.022μF	100V	J	
C279/C280	3479210071	Electric SA	10μF	50V	M	
C281/C282	3479322071	Electric SG	22μF	50V	M	
C283	3679104297	Mylar	0.1μF	63V	J	
C284	3679223120	Mylar	0.01μF	100V	J	
C285	3679104297	Mylar	0.1μF	63V	J	
C286-C289	·	Not used !				
C290	3579102530	Ceramic	1000pF	50V	J	
C501-C512	·	Not used !				
C513L/R	3579102530	Ceramic	1000pF	50V	J	
C514L/R	3679473120	Mylar	0.047μF	100V	J	
C515	3479347121	Electric SG	470μF	10V	M	
C516	3479347041	Electric SG	47μF	25V	M	
C517/C518	3479210061	Electric SA	10μF	35V	M	
C519	3479322071	Electric SG	22μF	50V	M	
C520	3479247971	Electric SA	4.7μF	50V	M	
C521-C522	·	Not used !				
C522L/R	3579222530	Ceramic	2200pF	50V	J	D
C523/C524	3479310269	Electric SG	1000μF	35V	M	
C523L/R	3579222530	Ceramic	2200pF	50V	J	D
C524R	3579222530	Ceramic	2200pF	50V	J	D
C525	3479347161	Electric SG	470μF	35V	M	
C525L/R	3579222530	Ceramic	2200pF	50V	J	D
C526-C528	3479210071	Electric SA	10μF	50V	M	
C629	3479210061	Electric SA	10μF	35V	M	
Connectors						
CNT201	436202163132	Ass'y 2P 160mm to Tuner Board				
CNT202	4428516210	Plug 3P				
CNT203	4428516110	Plug 2P				
CNT204	436212083132	Ass'y 12P 80mm to Tuner Board				
CNT502	436203123121	Ass'y 3P 120mm to Tuner Board				
CNT504	436204503132	Ass'y 4P 500mm to Surround Board				
CNT505	436202303132	Ass'y 2P 300mm to Posistor Board				
CNT601	4428525860	Wafer 1P				
CNT602	4428525790	Wafer 3P				
CNT803	436204143121	Ass'y 4P 140mm to Tuner Board				
Coils						
L201L/R	2648601470	Inductor, 50uH				
L501L/R	2648001010	Inductor, 0.5uH				
Diodes						
D201/D202	2058306101	1N4148				
D203/D204	2258522112	Zener, MTZ 6.2B				
D205/D206	·	Not used !				
D207	2258106100	1N4002				

Ref. No.	Part No.	Description	Remark
D208/D209	2058306101	1N4148	
D506	2258522119	MTZ 12B	
D507	2258106100	1N4002	
D508/D509	·	Not used !	
D510	2258522119	Zener, MTZ 12B	
D511	·	Not used !	
D512-D515	2058306101	1N4148	
D702	2258106100	1N4002	
Ground Plate (Angle)			
GND Plate	4235007210	Ground Plate Angle-type	
IC's			
IC201	2168206104	KIA4559P, Amplifier	
IC202	2168000122	SSM-2126, Pro-Logic	
IC203/IC204	2168017132	LC7821, Audio Selector	
IC205	2168017106	BA7625, Video Selector	
IC206	2138009115	MC14094, Shift Registor	
IC207	2168206104	KIA4559P, Amplifier	
IC209	2168613107	GL7915, Regulator	
IC210	2168601101	GD7805, Regulator	
IC211	2168601105	GD7815, Regulator	
Resistors; All resistors are 1/5W carbon film ±5% tolerance, unless otherwise specified. M. is metal film, M.O is metal oxide, and C. is cement type.			
R201L/R	3069102970	1kΩ	
R202L/R	3069473970	47kΩ	
R203L/R	3069821970	820Ω	
R204L/R	3069564970	560kΩ	
R205L/R	3069433970	43kΩ	
R206L/R	3069471970	470Ω	
R207L/R	3069104970	100kΩ	
R208/R209	3069470970	47Ω	
R210L/R	3069102970	1kΩ	
R211L/R	3069473970	47kΩ	
R212L/R	3069102970	1kΩ	
R213L/R	3069473970	47kΩ	
R214L/R	3069102970	1kΩ	
R215L/R	3069473970	47kΩ	
R216L/R	3069102970	1kΩ	
R217L/R	3069102970	1kΩ	
R218L/R	3069473970	47kΩ	
R219L/R	3069102970	1kΩ	
R220L/R	3069102970	1kΩ	
R221L/R	3069473970	47kΩ	
R222L/R	3069102970	1kΩ	
R223L/R	3069473970	47kΩ	
R224L/R	3069102970	1kΩ	
R225L/R	3069750970	75Ω	
R226-R228	3069750970	75Ω	
R229/R230	3069101970	100Ω	
R231-R233	·	Not used !	
R234/R235	3069101970	100Ω	
R236/R237	·	Not used !	
R238-R241	3069101970	100Ω	
R242/R243	3069470970	47Ω	
R244L/R	3069104970	100kΩ	
R245L/R	3069471970	470Ω	
R246L/R	3069104970	100kΩ	

Ref. No.	Part No.	Description	Remark
R247L/R	3069471970	470Ω	
R248L/R	3069471970	470Ω	
R249L/R	3069104970	100kΩ	
R250L/R	3069471970	470Ω	
R251L/R	3069104970	100kΩ	
R252/R253	3069101970	100Ω	
R254-R256	3069223970	22kΩ	
R257	3069473970	47kΩ	
R258	3069752970	7.5kΩ	
R259	3069153970	15kΩ	
R260	3069473970	47kΩ	
R261	3069153970	15kΩ	
R262	3069752970	7.5kΩ	
R263	3069151970	150Ω	
R264	3069332970	3.3kΩ	
R265/R266	3029181472	M., 180Ω 1W	
R267	·	Not used !	
R268	3069223970	22kΩ	
R269-R273	·	Not used !	
R274	3069223970	22kΩ	
R275-R289	·	Not used !	
R290	3069102940	1kΩ	
R519L/R	3069272970	2.7kΩ	
R520L/R	3069102970	1kΩ	
R521L/R	3069682970	6.8kΩ	
R522L/R	3059398782	C., 0.39Ω 5W	
R523L/R	3059398782	C., 0.39Ω 5W	
R524L/R	3069220970	22Ω	
R525L/R	3069220970	22Ω	
R526L/R	3029100470	M., 10Ω 1W	
R527L/R	3069123970	12kΩ	
R528	·	Not used !	
R529	3069101970	100Ω	
R530	3029470470	M.,47Ω 1W	
R531	3069472970	4.7kΩ	
R532	3069223970	22kΩ	
R533/R534	3069103970	10kΩ	
R535/R536	3069332970	3.3kΩ	
R537/R538	3029470470	M.,47Ω 1W	
R539/R540	3069181970	180Ω	
R541	3069273970	27kΩ	
R542	3069473970	47kΩ	
R543	3069392970	3.9kΩ	
R544	3069223970	22kΩ	
R545	3069101970	100Ω	
R546	3069103970	10kΩ	
R547	3069105970	1MΩ	
R548/R549	3069473970	47kΩ	
R550	3069223970	22kΩ	
R551	3029220470	M.,22Ω 1W	
R552/R553	·	Not used !	
R554	3029220470	M., 22Ω 1W	
R555	·	Not used !	
R556	3029100470	M., 10Ω 1W	
R557	3029330572	M., 33Ω 2W	
R558	3029100572	M., 10Ω 2W	
R559	3029330472	M., 33Ω 1W	
R560-R589	·	Not used !	
R590/R591	3029479470	M., 4.7Ω 1W	
Relays			
RLY501	5528001440	HR323	

Ref. No.	Part No.	Description	Remark
RLY502	5528001460	HR321	
RLY503	5528001460	HR321	
RLY701	5528001020	RY12	
Transistors			
Q201/Q202	2208206105	KIA1015Y(KTA1266BL) PNP	
Q203/Q204	2208622106	DTC114Y NPN	
Q205	2208609102	KMPS A06 NPN	
Q511L/R	2028416106	2SC3855 NPN	
Q512L/R	2028116103	2SA1491 PNP	
Q513	2208609102	KMPS A06 NPN	
Q514/Q515	2208606104	KTC1815Y(KTC3198Y) NPN	
Q516	2208622106	DTC114Y NPN	
Q517	2208606104	KTC1815Y(KTC3198Y) NPN	
Q518/Q519	2208622106	DTC114Y NPN	
Q520/Q521	2208609102	KMPS A06 NPN	
Q522	2208606104	KTC1815Y(KTC3198Y) NPN	
Q523	2208106105	KTA1015Y(KTA1266Y) PNP	
Q524	2208606104	KTC1815Y(KTC3198Y) NPN	
Q525	2208622106	DTC114Y NPN	

Front P.C. Board

Capacitors						
C901-C911	3579101130	Ceramic	100pF	50V	J	
C912	3679103120	Mylar	0.01μF	100V	J	
C913	3479310121	Electric SG	100μF	10V	M	
C914	3439147132	Electric SG	0.047F	5.5V	M	
C915	3579270130	Ceramic CH	27pF	50V	J	
C916	3579270130	Ceramic CH	27pF	50V	J	
C917	3519102935	Ceramic	1000pF	50V	J	Axial
C918	3579101130	Ceramic	100pF	50V	J	
C919	3579473120	Ceramic	0.047μF	100V	J	
C920	3479210071	Electric SG	10μF	50V	M	
C921	3579103530	Ceramic	0.01μF	50V	J	
C922	·	Not used !				
C923	3519101935	Ceramic	100pF	50V	J	Axial
C924	3579473120	Ceramic	0.047μF	50V	J	
C925	3579104530	Ceramic	0.1μF	50V	J	
C926/C927	3519103935	Ceramic	0.01μF	50V	J	Axial
C989	·	Not used !				
C990	3579103530	Ceramic	0.01μF	50V	J	
C991	·	Not used !				
C992	3519102935	Ceramic	0.001μF	50V	J	
Connectors						
CNT302	436206123132	Ass'y 6P 120mm to Volume Board				
CNT704	436208123132	Ass'y 8P 120mm to Surround Board				
CNT901	436204063131	Ass'y 4P 80mm to Switch Board				
CNT902	436206403132	Ass'y 6P 400mm to Power Board				
CNT903	436213402132	Ass'y 13P 400mm to Tuner Board				
Diodes						
D901	2258522110	MTZ 5.1B				
D902	2258522116	MTZ 9.1B				
D903-D915	2058306101	1N4148				
D916	·	Not used !				

Ref. No.	Part No.	Description	Remark
D917	2308220140	LED, SLC-22 UR5	
D918/D919	2058306101	1N4148	
D992	2058306101	1N4148	
Others			
RSN901	3938131460	Resonator, 12LM8	
FIP901	2328130301	FIP 12LM8	
IC's			
IC901	2138313158	μPD75216, CPU	
IC902	2408000131	Remocon Sensor	
Resistors			
R901-R912	3069102970	1kΩ	
R913	3069391970	390Ω	
R914	3069563970	56kΩ	
R915	3069391970	390Ω	
R916	3069390970	39Ω	
R917	3069105970	1MΩ	
R918	3069103970	10kΩ	
R919	·	Not used !	
R920/R921	3069473970	47kΩ	
R922	·	Not used !	
R923	3069391970	390Ω	
R924	·	Not used !	
R925-R928	3069123970	12kΩ	
(R928)	3069103970	10kΩ	
R929-R989	·	Not used !	
R990	3069473970	47kΩ	
R991	·	Not used !	
R992	3069682970	6.8kΩ	
R993	3069102970	1kΩ	
Transistors			
Q901	2208206105	KTA1015Y(KTA1266BL) PNP	
Q902/Q903	2208606104	KTC1815Y(KTC3198Y) NPN	
Q904/Q905	2208622106	DTC114YS NPN	
Others			
Trans 602	2828087001	Main Transformer for 120Vac 60Hz	A
Trans 602	2828090001	Main Transformer for 110/220Vac 60Hz	DOM.
Trans 602	2828090101	Main Transformer for 230Vzc 50Hz	C,D,F

Control P.C. Board

Connector			
CNT1000	436207163132	Ass'y 7P 160mm to Surround Board	
Diode			
D1100	2258522110	MTZ 5.1B	
IC's			
IC1100	2138001106	GD14011, NAND GATE	
IC1101	2138001103	GD14027 J.K Flip/Flop	

Ref. No.	Part No.	Description	Remark
Resistors			
R1100	3069100970	10Ω	
R1101	3069152970	1.5kΩ	
R1102	3069272970	2.7kΩ	
Transistor			
Q1100	2208606104	KTC1815Y(KTC3198Y) NPN	

Balance P.C. Board

Capacitors							
C235L/R	3579101130	Ceramic	100pF	50V	J	D
C236L/R	3579101130	Ceramic	100pF	50V	J	D
C237	3479222971	Electric SG	2.2μF	50V	M	
C238-C289	·	Not used !				
C290L/R	3579104530	Ceramic	0.1μF	50V	J	
Connectors						
CNT202	436203357132	Ass'y 3P 350mm to Main Board				
CNT203	436202407732	Ass'y 2P 400mm to Main Board				
CNT303	436203203132	Ass'y 3P 200mm to Volume Board				
Resistors						
R229L/R	3069102970	1kΩ				
R230L/R	3069473970	47kΩ				
R231	3069750970	75Ω				

Posistor P.C. Board

Connector			
CNT501	4428516110	Plug 2P	
Posistors			
POS1/POS2	2438012200	PTH487 A01 BE222T	

Switch P.C. Board

Connectors			
CNT504	4428525540	Plug 4P	
CNT901	4428513440	Plug 4P	
D920/D921	2371124701	LED, SLR-34URC-70F124	

Headphone P.C. Board

Capacitors						
C521L/R	3579561130	Ceramic	560pF	50V	J	D
C591	3579104530	Ceramic	0.1μF	50V	J	

Ref. No.	Part No.	Description	Remark
Connector			
CNT502	436203453121	Ass'y 3P 450mm to Tuner Board	
Resistors			
R549L/R	3229471572	M., 470Ω 2W	
R550L/R	3069152970	1.5kΩ	

Tone P.C. Board

Capacitors						
C401L/R	3679223120	Mylar	0.022μF	100V	J	
C402L/R	3679223120	Mylar	0.022μF	100V	J	
C403L/R	3579561130	Ceramic	560pF	50V	J	
C404L/R	3509390130	Ceramic	39pF	50V	J	
C405L/R	3479210071	Electric SA	10μF	50V	M	
C406L/R	3579561130	Ceramic	560pF	50V	J	
C407/C408	3479347041	Electric SG	47μF	25V	M	
Connector						
CNT403	436209187132	Ass'y 9P 180mm to Bottom Board				
IC						
IC401	2168206104	KIA4559, Amplifier				
Resistors						
R401L/R	3069223970	22kΩ				
R402L/R	3069225970	2.2MΩ				
R403L/R	3069333970	33kΩ				
R404L/R	3069223970	22kΩ				
R405L/R	3069203970	20kΩ				
R406L/R	3069471970	470Ω				
R407	3069104970	100kΩ				
R408/R409	·	Not used !				
R410/R411	3069470970	47Ω				

Volume P.C. Board

Capacitors					
C301L/R	3479233871	Electric SA	0.33μF	50V	M
C302L/R	3579561130	Ceramic	560pF	50V	J
C303	·	Not used !			
C304	3479247031	Electric SA	47μF	16V	M
C305/C306	3479210121	Electric SA	100μF	10V	M
C307	3579473530	Ceramic	0.047μF	50V	J
C308/C309	3579104530	Ceramic	0.1μF	50V	J
Connectors					
CNT301	4428508210	Plug 10P			
CNT302	4428516510	Plug 6P			
CNT303	4428516210	Plug 3P			
CNT304	4428508210	Plug 2P			
CNT702	436207263132	Ass'y 7P 260mm to Surround Board			

Ref. No.	Part No.	Description	Remark
IC's			
IC301	2168007204	TA7291S, Motor Driver	
Resistors			
R301L/R	3069563970	56kΩ	
R302L/R	3069182970	1.8kΩ	
R303	3069470970	47Ω	
R304	3069103970	10kΩ	
R305	3069332970	3.3kΩ	
R306	3069121970	120Ω	

Volume LED P.C. Board

Connector			
CNT304	4358102184	Ass'y 2P 180mm to Volume Board	
Diode			
D301	2371124701	LED, SLR-34URC-70F 124	

Bottom P.C. Board

Connector						
C303L/R	3479247971	Electric SA	4.7μF	50V	M	
C304L/R	3579151130	Ceramic	150pF	50V	J	
C306L/R	3579470130	Ceramic	47pF	50V	J	
C307L/R	3479247971	Electric SA	4.7μF	50V	M	
C309/C310	3479247031	Electric SA	47μF	16V	M	
C409	3479247971	Electric SA	4.7μF	50V	M	
C410	3579101130	Ceramic	100pF	50V	J	
C412L/R	3479247971	Electric SA	4.7μF	50V	M	
C417	3479247971	Electric SA	4.7μF	50V	M	
C800L/R	3579102530	Ceramic	1000pF	50V	J	
C801L/R	3479222971	Electric SA	2.2μF	50V	M	
C802L/R	3579101130	Ceramic	100pF	50V	J	
C803L/R	3479222071	Electric SA	22μF	50V	M	
C804L/R	3579509030	Ceramic	5pF	50V	J	
C805L/R	3479347069	Electric SG	47μF	35V	M	
C806	3479247971	Electric SA	4.7μF	50V	M	
C807-C809	3479210071	Electric SA	10μF	50V	M	
C810	3679223120	Mylar	0.022μF	100V	J	
C811	3479210071	Electric SA	10μF	50V	M	
C812	3479222971	Electric SA	2.2μF	50V	M	
C813	·	Not used !				
C814	3479210069	Electric SA	10μF	35V	M	
C815	3579509030	Ceramic	5pF	50V	J	
C816	3579102530	Ceramic	1000pF	50V	J	
C817	3579101130	Ceramic	100pF	50V	J	
C818	3479210971	Electric SA	1μF	50V	M	
C819-C820	3579101130	Ceramic	100pF	50V	J	
C821/C822	3479310169	Electric SG	100μF	35V	M	
C823	3479247971	Electric SA	4.7μF	50V	M	
C824	3579102530	Ceramic	1000pF	50V	J	
C825	3479347121	Electric SG	470μF	63V	M	
C826	3479347041	Electric SG	47μF	25V	M	

Ref. No.	Part No.	Description	Remark
C827/C828	3409310269	Electric SG 1000μF 35V M	
C829	·	Not used !	
C830/C831	3409310269	Electric SG 1000μF 35V M	
C832	3679223120	Mylar 0.022μF 100V J	
C833	3679104297	Mylar 0.1μF 63V J	
Connectors			
CNT206	436206203132	Ass'y 6P 200mm to Main Board	
CNT301	436210123132	Ass'y 10P 120mm to Volume Board	
CNT401	436204308332	Ass'y 4P 300mm to Tuner Board	
CNT403	4428516810	Plug 9P	
CNT703	436212123132	Ass'y 12P 120mm to Surround Board	
CNT801	436207453121	Ass'y 7P 450mm to Tuner Board	
CNT802	436206453121	Ass'y 6P 450mm to Tuner Board	
CNT804	436209457132	Ass'y 9P 450mm to Tuner Board	
CNT805	436202407732	Ass'y 2P 400mm to Tuner Board	
Diodes			
D801/D802	2258100135	1N4002	
D803/D804	2058306101	1N4148	
D805	2258522122	MTZ 12B	
D806	2058306101	1N4148	
D807	2258100135	1N4002	
Fuses			
F801L/R	5508202621	NB3A 125V	
(F801L/R)	5508202630	NB3A 250V	DOM.
(F801L/R)	5508402735	F3.15A 250V	C,D,E,F
IC's			
IC402-IC404	2168206104	KIA4559P, Buffer	
IC801	2178317133	STK4122 II	
IC802	2178317134	STK4026 II	
Resistors			
R308L/R	3069471970	470Ω	
R309L/R	3069103970	10kΩ	
R310L/R	3069271970	270Ω	
R311L/R	3069222970	2.2kΩ	
R312L/R	3069471970	470Ω	
R313L/R	3069473970	47kΩ	
R314/R315	3069101970	100Ω	
R408	3069151970	150Ω	
R409	3069333970	33kΩ	
R412L/R	3069104970	100kΩ	
R413L/R	3069471970	470Ω	
R414L/R	3069104970	100kΩ	
R416	3069332970	3.3kΩ	
R417	3069103970	10kΩ	
R418	3069332970	3.3kΩ	
R419/R420	3069101270	100Ω	
R421/R422	3069104970	100kΩ	
R423/R424	3069101270	100Ω	
R425	3069102970	1kΩ	
R426	3069332970	3.3kΩ	
R427	·	Not used !	
R428	3069104970	100kΩ	

Ref. No.	Part No.	Description	Remark
R801	·	Not used !	
R802L/R	3069473970	47kΩ	
R803L/R	3069202970	2kΩ	
R804	3069100270	M., 10Ω 1/4W	
R805L/R	3069132970	1.3kΩ	
R806L/R	3069222270	M., 2.2kΩ 1/4W	
R807L/R	3069433970	43kΩ	
R807	3069394970	390kΩ	
R808	3069103970	10kΩ	
R809	3069683970	68kΩ	
R810	3069224970	220kΩ	
R811	3069472970	4.7kΩ	
R812	3069101970	100Ω	
R813	3069102270	M., 1kΩ 1/4W	
R814	3069473970	47kΩ	
R815	3069102970	1kΩ	
R816	3069563970	56kΩ	
R817	3069152970	1.5kΩ	
R818	3069502970	5kΩ	
R819	3069103970	10kΩ	
R820/R821	3069101270	M., 100Ω 1/4W	
R822	3069102970	1kΩ	
R823	3069473970	47kΩ	
R824	3059278682	C., 0.27Ω 3W	
R825	3069153970	15kΩ	
R826/R828	·	Not used !	
R827/R829	3069223970	22kΩ	
R828	·	Not used !	
R830	3069183970	18kΩ	
R831	3069182970	1.8kΩ	
R832	3069183970	18kΩ	
R833	3029470270	M., 47Ω 1W	
R834	3069101270	M., 100Ω 1/4W	
Transistors			
Q401	2208606114	KMPS A06 NPN	
Q402L/R	2208606112	2SD1302 NPN	
Q403	2208206105	KTA1015Y(KTA1266Y) PNP	
Q404	2208606112	2SD1302 NPN	
Q801	2208606104	KTC1815Y(KTC3198Y) NPN	
Q802	2208206105	KTA1015Y(KTA1266Y) PNP	
Q803-Q805	2208606104	KTC1815Y(KTC3198Y) NPN	
Q806	2208622106	DTC114Y NPN	
Relay			
RLY801	5528001590	G5Z-2A, 24V	

Tuner P.C. Board

Ref. No.	Part No.	Description	Remark
Capacitors			
C100	·	Not used !	
C101	3579102530	Ceramic 0.01μF 50V J	
C102	3479210131	Electric SG 100μF 16V M	
C103	3579102530	Ceramic 0.01μF 50V J	
C104	3479247971	Electric SA 0.47μF 50V M	
C105	3579223530	Ceramic 0.022μF 50V J	
C106	3619471110	Poly 470pF 50V J	
C107/C108	3579223530	Ceramic 0.022μF 50V J	
C109	3579473530	Ceramic 0.047μF 50V J	
C110	3579223530	Ceramic 0.022μF 50V J	
C111	3479210971	Electric SA 1μF 50V M	
C112	3579103530	Ceramic 0.01μF 50V J	
C113	3479347041	Electric SG 47μF 16V M	
C114	3579331130	Ceramic 330pF 50V J	
C115/C116	3579101130	Ceramic 100pF 50V J	D
C117-C119	3579223530	Ceramic 0.022μF 50V J	
C120	3479210071	Electric SA 10μF 50V M	
C121	3579103530	Ceramic 0.01μF 50V J	
C122	3579470130	Ceramic 47pF 50V J	
C123	3479210071	Electric SA 10μF 50V M	
C124/C125	3479247971	Electric SA 4.7μF 50V M	
C126	3479233971	Electric SA 3.3μF 50V M	
C127	3579331130	Ceramic 330pF 50V J	
C128	3679332120	Mylar 0.0033μF 100V J	
C129	3679563120	Mylar 0.056μF 100V J	
C130	3479222971	Electric SA 2.2μF 50V M	
C131	3619102110	Poly 1000pF 50V J	
C132	3679473120	Mylar 0.047μF 100V J	
C133	3619681110	Poly 680pF 50V J	
C134	3479210971	Electric SA 1μF 50V M	
C135	3479233971	Electric SA 3.3μF 50V M	
C136	3479210971	Electric SA 1μF 50V M	
C137	3479233971	Electric SA 3.3μF 50V M	
C138	3479222131	Electric SG 220μF 16V M	
C139/C140	3479222041	Electric SG 22μF 25V M	
C141/C142	3679152120	Mylar 0.0015μF 100V J	
(C141/C142)	3679102120	Mylar 0.001μF 100V J	C,D.E.F
C143	3579151130	Ceramic 150pF 50V J	
C144/C145	3579471130	Ceramic 470pF 50V J	B
C146/C147	3479222971	Electric SA 2.2μF 50V M	
C148/C149	3679392120	Mylar 0.0039μF 100V J	
C150/C151	3579103530	Ceramic 0.01μF 50V J	
C152	3479347041	Electric SG 47μF 25V M	
C153	3479210971	Electric SA 1μF 50V M	
C154	3579223530	Ceramic 0.022μF 50V J	
C155/C156	3579103530	Ceramic 0.01μF 50V J	
C157	·	Not used !	
C158/C159	3529220210	Ceramic CH 22pF 50V J	
C160-C162	3579101130	Ceramic 100pF 50V J	
C163/C164	·	Not used !	
C165	3679473120	Mylar 0.047μF 100V J	
C166/C167	·	Not used !	
C168/C169	3679473120	Mylar 0.047μF 100V J	
C170-C172	3579222530	Ceramic 2200pF 50V J	D
C173/C174	3679473120	Mylar 0.047μF 100V J	D
C175	3679473120	Mylar 0.047μF 100V J	
C176/C177	3579222530	Ceramic 2200pF 50V J	D
C178/C179	3679473120	Mylar 0.047μF 100V J	D
C180-C183	3679683120	Mylar 0.068μF 100V J	
C624	3679683120	Mylar 0.068μF 100V J	
C911	3579101130	Ceramic 100pF 50V J	D
Ceramic Filters			
CF1	3908011001	Ceramic Filter 10.7 MA8	A,B,Dom
(CF1)	3908011011	Ceramic Filter 10.7 MS 3G	C,D,E,F
CF2	3908011001	Ceramic Filter 10.7 MA8	A,B,Dom
(CF2)	3908011011	Ceramic Filter 10.7 MS 3G	C,D,E,F
CF3	3908011011	Ceramic Filter 10.7 MS 3G	C,D,E,F
CF4	3908001150	SFZ450B	

Ref. No.	Part No.	Description	Remark
Connectors			
CNT101	4428525790	Wafer 3P	
CNT102	4428525790	Wafer 3P	
CNT401	4428516310	Plug 4P	
CNT501	4428516310	Plug 4P	
CNT502	4428519310	Plug 3P	
CNT801	4428519710	Plug 7P	
CNT802	4428519610	Plug 6P	
CNT803	4428519410	Plug 4P	
CNT804	4428516810	Plug 9P	
CNT805	4428516110	Plug 2P	
Coils			
L101	2608201120	AM ANT	
L102	2638201150	AM OSC	
L103	2838501110	FM DET, A	
L104	2838501210	FM DET, B	
L105	2848001250	AM IFT	
L106	2658301100	MPX Filter, Right	
L107	2658301100	MPX Filter, Left	
L109-L110	2648001010	Inductor 0.5uH	
L108	2648601430	Inductor 20.8mH	D
L110	2608207360	AM Loop Antenna	
Trimmers			
TC101	3838001010	20pF	
TC102	3838001100	10pF	
Crystal			
X-101	3908101031	Crystal, 7.2MHz	
Fuses			
(F101/F102)	5508302735	T 3.15A 250V	C,D,E,F
(F103/F104)	5508302735	T 3.15A 250V	C,D,E,F
F101-F102	5508202821	SB 3.5A 125V	A
F103/F104	5508202621	SB 3A 125V	A
(F101/F102)	5508202830	NB 3.5A 250V	DOM.
(F103/F104)	5508202830	NB 3.5A 250V	DOM.
IC's			
IC101	2168017119	LA1265, IF(AM/FM)	
IC102	2168411105	HA12016, MPX	
IC103	2138017112	LM7001, PLL	
Diodes			
D101-D104	2058819106	1N4148	
D105	2058100136	1N5402	
D106	2258106100	1N4002	
D107-D110	2058100136	1N5402	
D111	-	Not used !	
D112	2058100136	1N5402	
D113	2258106100	1N4002	
D114	2058100136	1N5402	
D116	2058100136	1N5402	
D115	2258106100	1N4002	

Ref. No.	Part No.	Description	Remark
Varactor Diodes			
VD101/VD102	2058819106	KV1236Z	
FM Front END			
F/E 1	3928801930	FE306-A15	
F/E 1	3928801930	FE407-G60	D
F/E 1	3928801970	FE407-A15	C,E,F
Resistors			
R101	3069623970	62kΩ	D
R102	3069104970	100kΩ	D
R103	3069561970	560Ω	
R104	3069181970	180Ω	
R105	3069332970	3.3kΩ	
R106	3069331970	330Ω	
R107	3069471970	470Ω	
R108	3069331970	330Ω	
R109-R111	3069271970	270Ω	
R112	-	Not uused !	
R113	3069332970	3.3kΩ	
R114	3069103970	10kΩ	
R115	3069183970	18kΩ	
(R115)	3069473970	47kΩ	C,D,E,F
R116/R117	3069331970	330Ω	
R118	-	Not used !	
R119	3069820970	82Ω	
R120	3069103970	10kΩ	
R121	3069243970	24kΩ	
R122	3069222970	2.2kΩ	
(R122)	3069272970	2.7kΩ	C,D,E,F
R123	3069272970	2.7kΩ	
(R123)	3069222970	2.2kΩ	C,D,E,F
R124/R125	3069104970	100kΩ	
R126	3069272970	2.7kΩ	
R127	3069683970	68kΩ	
R128/R129	3069513970	51kΩ	C,D,E,F
(R128/R129)	3069473970	47kΩ	
R130	3069392970	3.9kΩ	
R131/R132	3069223970	22kΩ	
R133/R134	3069332970	3.3kΩ	
(R133/R134)	3069182970	1.8kΩ	C,D,E,F
R135/R136	3069271970	270Ω	
R137	3069682970	6.8kΩ	
R138	3069102970	1kΩ	
R139	3069103970	10kΩ	
R140-R143	3069332970	3.3kΩ	
R144/R145	-	Not used !	
R146/R147	3069104970	100kΩ	
R148	3069103970	10kΩ	
R149	3069152970	1.5kΩ	
R150	3069101970	100Ω	
R151	3069821970	820Ω	
R152/R153	3069331970	330Ω	
R154-R156	3069101970	100Ω	
R157/R158	3069472970	4.7kΩ	
R159/R160	3069103970	10kΩ	
R161	3069153970	15kΩ	
R162	3069103970	10kΩ	
R163-R174	3069220970	22Ω	
R175/R176	3069332970	3.3kΩ	

Ref. No.	Part No.	Description	Remark
R901-R906	3069102970	1kΩ	
Variable Resistors-Semifixed			
VR101/VR102	3248020343	Semi 20kΩ(B)	
VR103	3248020243	Semi 2kΩ(B)	
VR104	3248020443	Semi 200kΩ(B)	
Transistors			
Q101	2008409101	LM9018F NPN	
Q102	2208606108	KTC2240BL(KTC3200BL) NPN	
Q103	2018211100	2SK168, FET	
Q104-Q106	2008606105	KTA114YS PNP	
Q107	2208206105	KTA1015Y(KTA1266Y) PNP	
Q109/Q110	2208606112	2SD1302 NPN	

Surround P.C. Board

Capacitors					
C700	3579102530	Ceramic	0.001μF	50V	J
C701 L/R	3479210971	Electric SA	1μF	50V	M
C702/C703	3479322071	Electric SG	22μF	50V	M
C704	3579101130	Ceramic	100pF	50V	J
C705/C707	3479247871	Electric SA	0.47μF	50V	M
C706	3479210071	Electric SA	10μF	50V	M
C708	3479322071	Electric SG	22μF	50V	M
C709	3479210071	Electric SA	10μF	50V	M
C710	3679682120	Mylar	0.0068μF	100V	J
C711	3679104297	Mylar	0.1μF	63V	J
C712/C713	3479310121	Electric SG	100μF	10V	M
C714	3679682120	Mylar	0.0068μF	100V	J
C715	3479210071	Electric SA	10μF	50V	J
C716	·	Not used !			
C717	3679104297	Mylar	0.1μF	63V	J
C718	3479347041	Electric SG	47μF	25V	M
C719	3479322071	Electric SG	22μF	50V	M
C720	3679562120	Mylar	0.0056μF	100V	J
C721	3679104297	Mylar	0.1μF	63V	J
C722	3579561130	Ceramic	560pF	50V	J
C723	3679103120	Mylar	0.01μF	100V	J
C724/C725	3679474297	Mylar	0.47μF	63V	J
C726	3679104297	Mylar	0.1μF	63V	J
C727	·	Not used !			
C728	3479210071	Electric SA	10μF	50V	M
C729/C730	·	Not used !			
C730/C731	3479210071	Electric SA	10μF	50V	M
C732	3479222871	Electric SA	0.22μF	50V	M
C733	3479322071	Electric SG	22μF	50V	M
C734	3479210071	Electric SA	10μF	50V	M
C735	3679822120	Mylar	0.0082μF	100V	J
C736	·	Not used !			
C737	3679472120	Mylar	0.0047μF	100V	J
C738	3479233871	Electric SA	0.33μF	50V	M
C739	3679104297	Mylar	0.1μF	63V	J
C740	3479210971	Electric SA	1μF	50V	M
C741	3679333120	Mylar	0.033μF	100V	J
C742	3479347041	Electric SG	47μF	25V	M
C743	3479322071	Electric SG	22μF	50V	M
C744	3479310131	Electric SG	100μF	16V	M
C745L/R	3479247971	Electric SA	4.7μF	50V	M
C746L/R	3479247971	Electric SA	4.7μF	50V	M
C747L/R	3579470130	Ceramic	47pF	50V	M
C748L/R	3479247971	Electric SA	4.7μF	50V	M
C749R	3479247971	Electric SA	4.7μF	50V	M
C749L	3479233871	Electric SA	0.33μF	50V	M
C750/C751	3479233871	Electric SG	22μF	50V	M
C752	3579222530	Ceramic	2200pF	50V	Z
C753/C754	3479322071	Electric SG	22μF	50V	M
C755	3579472230	Ceramic	4700pF	50V	J
C756	3479222071	Electric SA	22μF	50V	M

Connectors		
CNT504	4428516310	Plug 4P
CNT701	4428516910	Plug 10P
CNT702	4428516610	Plug 7P
CNT703	4428517010	Plug 12
CNT704	4428516710	Plug 8P
CNT1000	4428516610	Plug 7P
Coil		
L701	2648647983	Inductor, 4.7uH
Crystal		
RSN701	3938201910	Resonator, 3.27MHz
Diodes		
D701-D704	2058306101	1N4148
D705	2258100135	1N4002
D706-D710	2058306101	1N4148
IC's		
IC701	2168206104	KIA4559P, Buffer
IC702/IC703	2168206104	KIA4559P, Mixer
IC704/IC705	2138017108	LC4966, Switch
IC706	2138099118	M50198P, Digital Relay
IC707/IC708	2138009115	MC14094, Shift Resistor
IC709	2168206104	KIA4559P, Buffer
IC710	2168017138	LA2730, Dolby NR
IC711	2168206104	KIA4559P, Amplifier
IC712	2138007124	TC9176, Volume
IC713	2168206104	KIA4559P, Amplifier
Resistors		
R701L/R	3069104970	100kΩ
R702/R703	·	Not used !
R704	3069274970	270kΩ
R705-R706	·	Not used !
R707	3069471970	470Ω
R708-R711	3069223970	22kΩ
R712	3069471970	470Ω
R713	3069183970	18kΩ
R714	·	Not used !
R715/R716	3069273970	27kΩ
R717/R718	3069223970	22kΩ
R719	3069152970	1.5kΩ
R720	·	Not used !

Ref. No.	Part No.	Description	Remark
R721	3069183970	18kΩ	
R722	3069473970	47kΩ	
R723	3069104970	100kΩ	
R724/R725	3069101970	100Ω	
R726-R729	3069104970	100kΩ	
R730	3069103970	10kΩ	
R731	3069472970	4.7kΩ	
R732	3069622970	6.2kΩ	
R733	3069101970	100Ω	
R734	3069622970	6.2kΩ	
R735	3069153970	15kΩ	
R736	·	Not used !	
R737	3069105970	1MΩ	
R738	3069104970	100kΩ	
R739	3069472970	4.7kΩ	
R740	·	Not used !	
R741	3069682970	6.8kΩ	
R742	3069123970	12kΩ	
R743	3069103970	10kΩ	
R744	3069473970	47kΩ	
R745	3069362970	3.6kΩ	
R746/R747	3069153970	15kΩ	
R748	3069272970	2.7kΩ	
R749	3069103970	10kΩ	
R750	3069472970	4.7kΩ	
R751	3069512970	5.1kΩ	
R752	3069104970	100kΩ	
R753	3069183970	18kΩ	
R754	3069153970	15kΩ	
R755	3069273970	27kΩ	
R756	3069181970	180Ω	
R757	3069274970	270kΩ	
R758	3069622970	6.2kΩ	
R759	3069123970	12kΩ	
R760	3069274970	270kΩ	
R761	3069333970	33kΩ	
R762	3069473970	47kΩ	
R763	3069101970	100Ω	
R764	·	Not used !	
R765L/R	3069103970	10kΩ	
R766L/R	3069202970	2kΩ	
R767L/R	3069224970	220kΩ	
R768L/R	3069103970	10kΩ	
R769L/R	3069102970	1kΩ	
R770L/R	3069104970	100kΩ	
R771L/R	3069471970	470Ω	
R772L/R	3069104970	100kΩ	
R774	3069103970	10kΩ	
R775	3069101970	100Ω	
R776	3069332970	3.3kΩ	
R777	3069103970	10kΩ	
R778-R780	3069102970	1kΩ	
R781-R782	·	Not used !	
R783	3069102970	1kΩ	
R784-R786	3069101970	100Ω	
R787	3069472970	4.7kΩ	
R788	3069472970	4.7kΩ	
R789	3069221970	220Ω	
R790	3069102970	1kΩ	
R791	3069102970	1kΩ	
R792-R798	·	Not used !	
R799	3069339970	3.3Ω	

Ref. No.	Part No.	Description	Remark
Transistors			
Q701-Q703	2208606112	2SD1302 NPN	
Q704	2208206105	KTA1015Y(KTA1266Y) PNP	
Q705	2208622105	KTA114YS PNP	
Q706/Q707	2208622106	DTC114Y NPN	
Q708/Q709	2208622105	DTA114YS PNP	
Q710	2208622106	DTC114Y NPN	
Q711	2008609102	KMPS A06 NPN	
Q712	2208622106	DTC114Y NPN	

Selector P.C. Board

Connectors			
CNT605	4428525790	Wafer 3P	DOM.
CNT607	4428525800	Wafer 4P	DOM.
CNT609	4428525860	Wafer 1P	DOM.
CNT610	4428525860	Wafer 1P	DOM.
Fuse			
F604	5508202830	NB3.5A 250V	DOM.
Transformer			
Trans601	2828066207	Stand-by Trans	A
(Trans601)	2828072607	Stand-by Trans	DOM.
(Trans601)	2828069807	Stand-by Trans	C,D,F
(Trans601)	2828069907	Stand-by Trans	E

Power P.C. Board

Capacitors						
C601/C602	3579473530	Ceramic	0.047μF	50V	J	D
C603	3479347139	Electric SG	470μF	16V	M	
C604	·	Not used !				
C605	3479210971	Electric SA	1μF	50V	M	
C606-C610	3609103160	Mylar	0.01μF	400V	Z	D
C611	3479310171	Electric SG	100μF	50V	M	
C612	3549472407	Ceramic	0.0047μF	400V	J	
C613/C614	3609103160	Mylar	0.01μF	400V	Z	
C615	3479310141	Electric SG	100μF	10V	M	
(C615)	3479347041	Electric SA	47μF	25V	M	
C616	3479322071	Electric SA	22μF	50V	M	
Connectors						
CNT601	4428505810	Plug 6P				
CNT602	4428525790	Wafer 3P				
CNT603	4428525800	Wafer 4P				
CNT604	4428525780	Wafer 2P				
CNT605	4428525790	Wafer 3P				DOM.
CNT606	4428505610	Plug 4P				
CNT607 /CNT608	·	Not used !				
CNT609	4428525860	Wafer 1P				DOM.
CNT610	4428525860	Wafer 1P				DOM.

Ref. No.	Part No.	Description	Remark
Diodes			
D601-D605	2258106100	1N4002	
D606	2258522116	MTZ 9.1B	
D607/D608	2258522121	MTZ 15B	
D609-D612	2058100138	6A 03	
D613	2258106100	1N4002	
D630	2258106100	1N4002	
D614	2058306101	1N4148	
D615	2258522105	MTZ3.3B	
Fuses			
F601	5508103221	SB 63A 125V	
(F601)	5508203330	NB 7A 250V	DOM.
(F601)	5508302735	T 3.15A 250V	C,D,E,F
F602	5508101221	SB 0.25A 125V	
(F602)	5508201630	NB 0.5A 250V	DOM.
(F602)	5508301435	T 0.315A 250V	C,D,E,F
(F603)	5508302535	T 2.5 250V	C,D,E,F
P601/P602	4228001410	Solder Pin	
Resistors			
R604-R613	3069221970	220Ω	
Transistor			
Q601	2208606114	MPS A06 NPN	

Ref. No.	Part No.	Description	Position
R502L/R	3069563970	56kΩ	
R503L/R	3069103970	10kΩ	
R504L/R	3069103970	10kΩ	
R505L/R	3069102970	1kΩ	
R506L/R	3069221970	220Ω	
R507L/R	3069103970	10kΩ	
R508L/R	3069681970	680Ω	
R509L/R	3069221970	220Ω	
R510L/R	3069221970	220Ω	
R511L/R	3069182970	1.8kΩ	
R512L/R	3069680970	68Ω	
R513L/R	3069680970	68Ω	
R514L/R	3069563970	56kΩ	
R515L/R	3069471970	470Ω	
R516L/R	3069153970	15kΩ	
R617L/R	3069222970	2.2kΩ	
R618L/R	3069222970	2.2kΩ	
Transistors			
Q500L/R	2208606104	KTC1815Y(KTC3198Y) NPN	
Q501L/R	2208606108	KTC2240BL(KTC3200BL) NPN	
Q502L/R	2208606108	KTC2240BL(KTC3200BL) NPN	
Q503L/R	2208606104	KTC1815Y(KTC3198Y) NPN	
Q504L/R	2208206105	KTA1015Y(KTA1266Y) PNP	
Q505L/R	2208206102	KTA949 PNP	
Q506L/R	2208606107	KTC2229 NPN	
Q508L/R	2028407118	2SC2168 NPN	
Q509L/R	2028107115	2SA958 PNP	

Driver P.C. Board

Capacitors					
C501L/R	3479210971	Electric SG	4.7μF	50V	M
C502L/R	3579681130	Ceramic	680pF	50V	J
C503L/R	3579473530	Ceramic	0.047μF	50V	J
C504L/R	3579471130	Ceramic	470pF	50V	J
C505L/R	3579200030	Ceramic	20pF	50V	J
C506L/R	3579309030	Ceramic	3pF	50V	J
C507L/R	3479247031	Electric SG	47μF	16V	M
C508L/R	3579309030	Ceramic	3pF	50V	J
C509L/R	3579101130	Ceramic	100pF	50V	J
C510L/R	3679473120	Mylar	0.047μF	100V	J
C511L/R	3579101130	Ceramic	100pF	50V	J
C512L/R	3479247971	Electric SG	4.7μF	50V	M
Connectors					
CNT501	436204188332	Ass'y 4P 180mm to Tuner Board			
CNT501L/R	4428525200	Plug 9P			
Diodes					
D501L/R	2258522119	MTZ 12B			
D502L/R	2058306101	1N4148			
D503L/R	2058306101	1N4148			
Resistors					
R501L/R	3069471970	470Ω			

Mechanical Parts List

No.	Description	Part No.	Q'ty	Remark
1	Cover Top, Black	046122022611	1	
2	Frame, Left	6122632110	1	
3	Foot-Front/Rear, Gold	046033101711	4	DOM.
3	Foot-Front/Rear, Gold	046033101611	4	B,C,D,E,F
3	Foot-Rear, Black	6033101610	2	A
3	Foot-Front, Gold	046033101611	2	A
4	Cover Plate, Black	3535037210	1	C,D,F
5	Bracket Tone	6505114910	1	
6	Frame, Right	6122632210	1	
7	Chassis Front	6122213110	1	
8	Cover Bottom	6123014210	1	
9	Chassis Back, Black	046102032111	1	DOM.
9	Chassis Back, Black	046102032121	1	A
9	Chassis Back, Black	046102032131	1	B
9	Chassis Back, Black	046102032141	1	C
9	Chassis Back, Black	046102032151	1	D
9	Chassis Back, Black	046102032161	1	E
9	Chassis Back, Black	046102032171	1	F
10	Ground Terminal	4408104910	1	
11	Cord AC Power, Black	4308001410	1	A,B
11	Cord AC Power, Black	4308002310	1	C,D,F
11	Cord AC Power, Black	4308001610	1	DOM.
11	Cord AC Power, Black for AU only	4308003610	1	
11	Cord AC Power, Black for UK only	4338000210	1	
12	Stopper Cord, Black	6518000710	1	A,B
12	Stopper Cord, Black	6518000111	1	C,D,F,E(UK)
12	Stopper Cord, Black	6513000310	1	DOM.
13	Plug Jumper	4328204210	5	
14	Panel Front, Black	048602018311	1	
15	Badge, Sherwood	048535033911	1	
15	Badge, Inkel	048535034011	1	
16	Body Front, Black	8521007910	1	
17	Button Power-Main, Black	8545074330	1	
18	Button Spring	6555004380	1	
19	Button Sleep, Black	8545082110	1	
20	Indicator, White	8555038710	1	DOM.
21	Button Speaker(A), Black	048545089711	1	
22	Button Speaker(B), Black	048545089712	1	
23	Button Preset, Black	8543040910	1	
24	Button Function, Black	048543040811	1	
25	Window Display for USA/CA only	048555036411	1	
25	Window Display for others	048555036412	1	
26	Button Mute, Gold	048545089811	1	
27	Button Loudness, Gold	048545082621	1	
28	Button Spring	6555002710	1	
29	Knob Rotary, Black, Treble/Bass/Loudness	048545088211	3	
30	Knob Rotary(Ass'y), Black	058643800110	1	
31	Terminal Speaker 8P, Front Speaker	4408105810	1	
32	Heatsink Regulator TR	7505206130	1	
33	Heatsink Regulator TR	7505206210	1	
34	Heatsink Regulator TR	7505206230	1	
35	Jack RCA 2P, Phono	4438108510	1	
36	Jack RCA 6P, Aux/CD/Tape1/Tape2	4438108710	2	
37	Jack RCA 3P, VDP/VCR1 OUT IN	4438108810	3	
38	Jack RCA 1P, VCR Out	4438109410	1	
39	Jack Digilink, Green	4438109610	1	
40	Jack Multi Room, Green	4438006510	1	A
41	Heatsink Power	7502005210	1	
42	Bracket Heatsink, Left	6505113210	1	
43	Bracket Heatsink, Right	6505113310	1	
44	Bracket P.C.Board-Main	6505113110	1	
45	Spring Holder, TR	6555801610	2	
46	Terminal Antenna	4408001510	1	A,B,DOM.

No.	Description	Part No.	Q'ty	Remark
46	Terminal Antenna	4408001610	1	C,D,E,F
47	Jack RCA 4P, Front Amp./Rear Amp.	4438108610	2	
48	Jack RCA 4P, Black, Center Amp.	4438110410	1	
49	Locking Tie	6528002810	1	
50	Switch Slide, De-empha	4618007410	1	B
51	Terminal Speaker, 2P, Center Speaker	4408106810	1	
52	Terminal Speaker, 4P, Surround	4408105410	1	
53	Bracket P.C.Board-Rear Amp.	6505103910	1	
54	Outlet, Black, 3P	4448102910	1	A,B
54	Outlet, Black, 1P	4448103610	1	C,D,E,F
54	Outlet, Black, 1P	4448103910	1	DOM.
55	Switch Slide, Impedence	4618007610	1	
56	Bracket P.C.Board-Driver	6505114510	1	
57	Fastener, Surround Board	6528300110	3	
58	Spacer P.C.Board-Surround	6705017610	2	
59	Switch Tact	4658003710	46	
60	Spacer LED, Black	6705008320	1	
61	Adapter AC	4428300310	1	DOM.
62	Volume Moter, Main	3228016310	1	
63	Switch Push, Loudness	4628058310	1	
64	Jack Phone, Gold	4438005010	1	
65	Volume Rotary, Balance	3208052010	1	
66	Jack RCA, 3P, Black, VCR 2 Input	4438109810	1	
67	Shield Fence, Balance Volume	6165138210	1	
68	Volume Rotary, Bass/Treble	3208062510	1	
69	Shield Fence P.C.Board-Tone	6163110710	1	
70	Switch Slide, Voltage Selector	4618006510	1	DOM., B
71	Spacer Felt	9725002210	2	
72	Sponge	6715015520	1	
73	Shield Fence	6165142210	1	
74	Bracket P.C.Board-CPU	6505103910	1	

Screws

S1	#2BTC 3×8 ZNB	8109230083	51	
S2	WSAM 4×8 ZNB	8119440083	6	
S3	WSAM 4×8 ZNY	8159440081	4	
S4	#2PTC 4×6 ZNY	8119240061	1	
S5	Ground ZNB	8155000710	4	
S6	#2FTC 3×8 ZNB	8129230083	2	
S7	#2WPTC 3×8 ZNY	8159230081	14	
S8	MSPW 3×12 ZNY	8099130121	8	
S9	#2BTC 2.6×8 ZNB	8109226083	2	
S10	#1PTC 3×10 ZNB	8119130103	19	
S11	#2BTC 3×10 ZNY	8109230101	4	
S12	#2BTC 2.6×8 ZNB	8109226083	6	

Others

B1	P.C.Board – Front	4002022600		
B2	P.C.Board – Main	4002022200		
B3	P.C.Board – Tuner	4002022300		
B4	P.C.Board – Bottom	4002022310		
B5	P.C.Board – Surround	4002022400		
B6	P.C.Board – Driver	4002022420		
B7	P.C.Board – Power	4002022410		
B8	P.C.Board – Tone	4002022620		
B9	P.C.Board – Main Volume	4002022610		
B10	P.C.Board – Balance	4002022660		
B11	P.C.Board – Button Power	4002022410		
B12	P.C.Board – Headphone	4002022630		
B13	P.C.Board – Voltage Selector	4002022430		
B14	P.C.Board – Posistor	4002022210		
B15	P.C.Board – Volume LED	4002022650		
B16	P.C.Board – CPU			

Semiconductor Lead Identification & Internal Diagram

TC9176: IC712

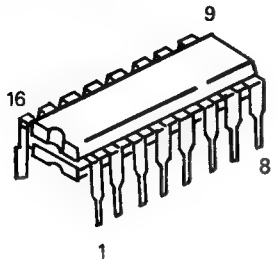

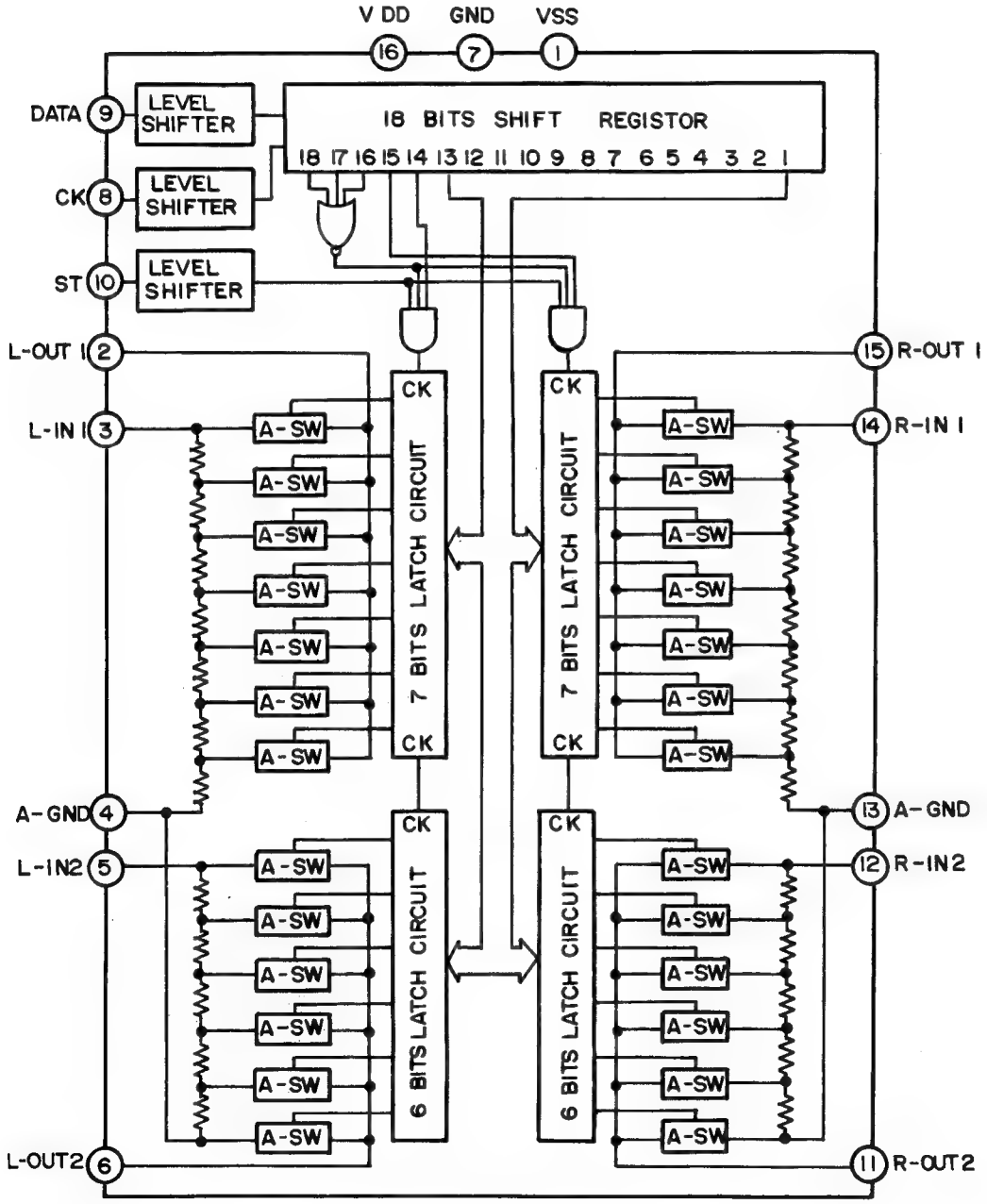

LA2730: IC710

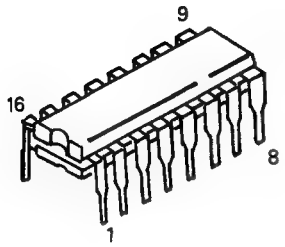

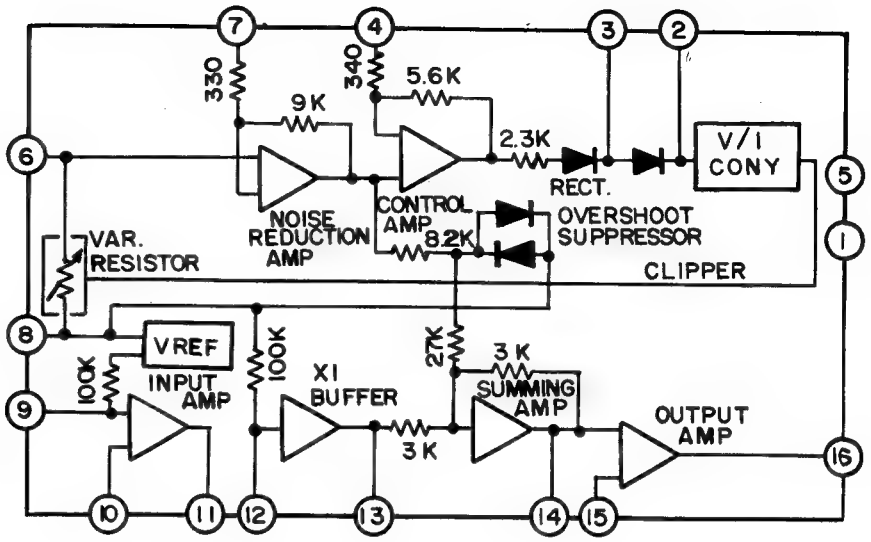

KIA4559P: IC201, IC207, IC208,
IC702, IC703 IC701,
IC709, IC711, IC713,
IC401–IC403

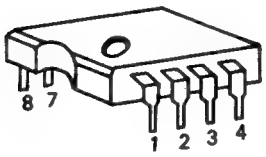

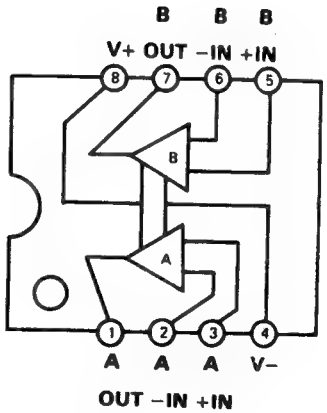

STK 4122 II: IC801

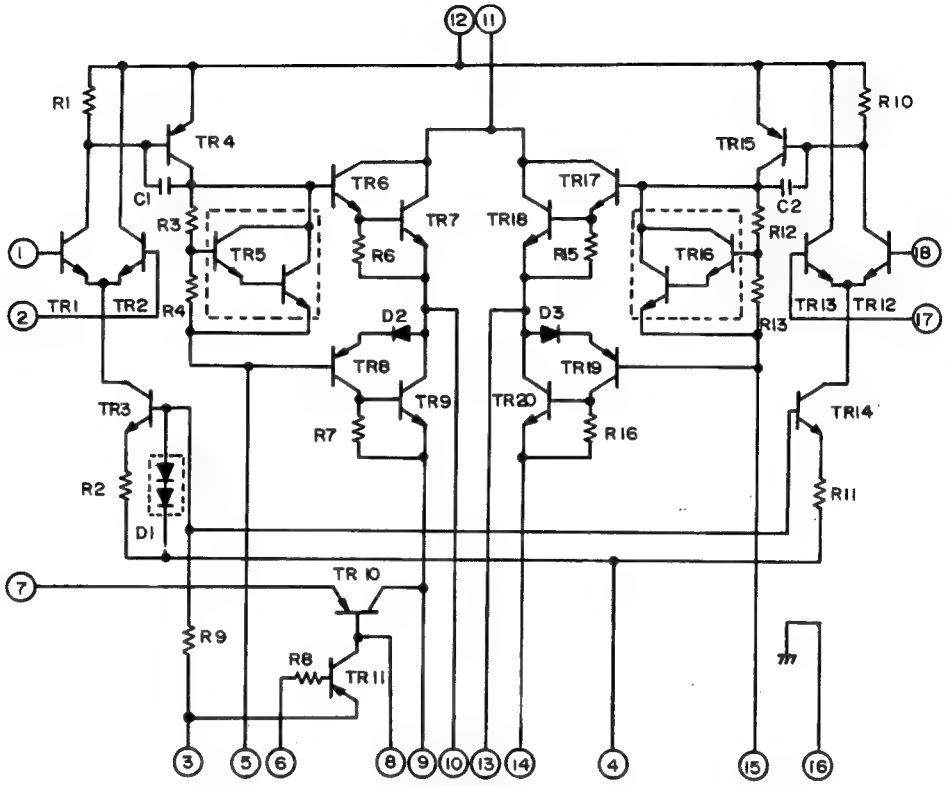

LA1265: IC101

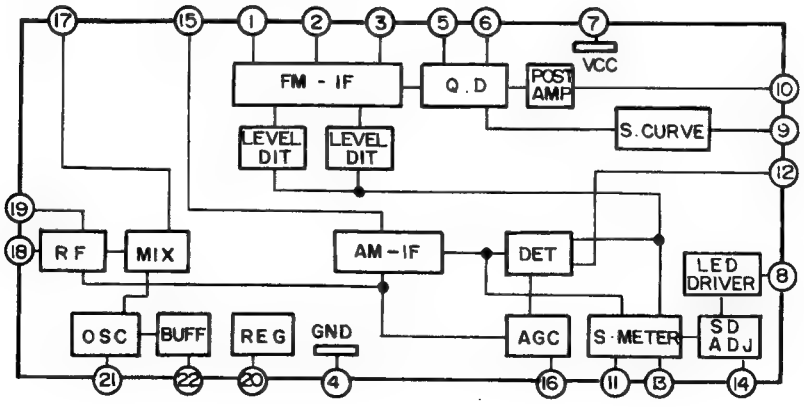

BA7625: IC205

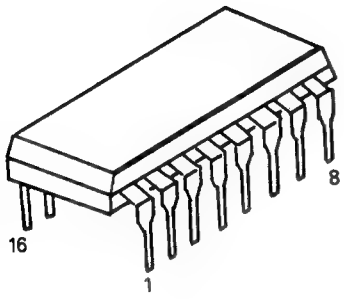

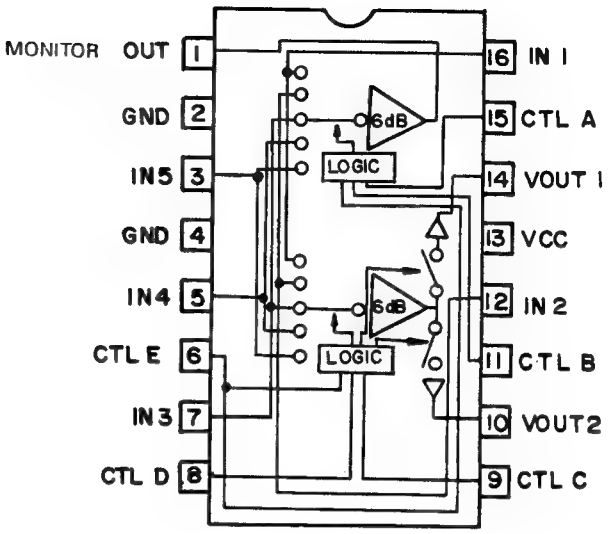

HA12016: IC102

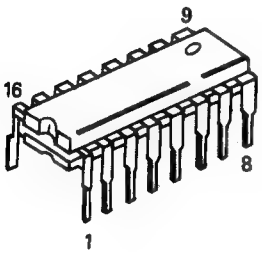

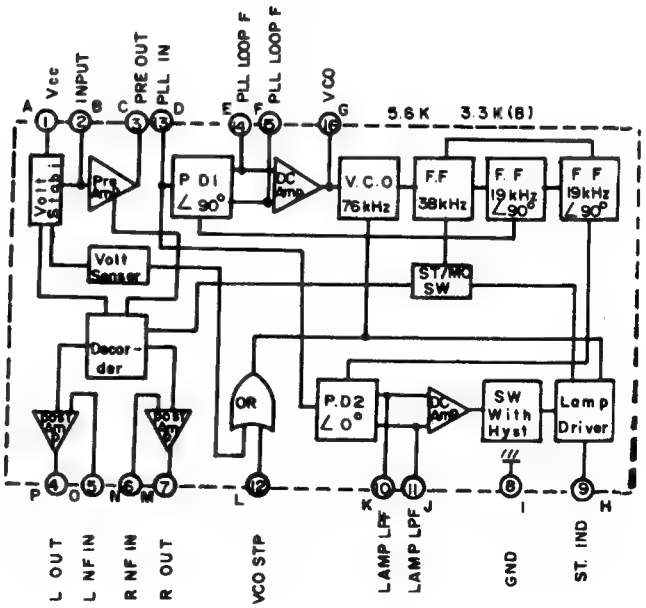

M50198P: IC706

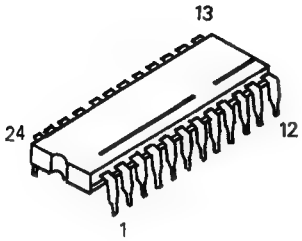

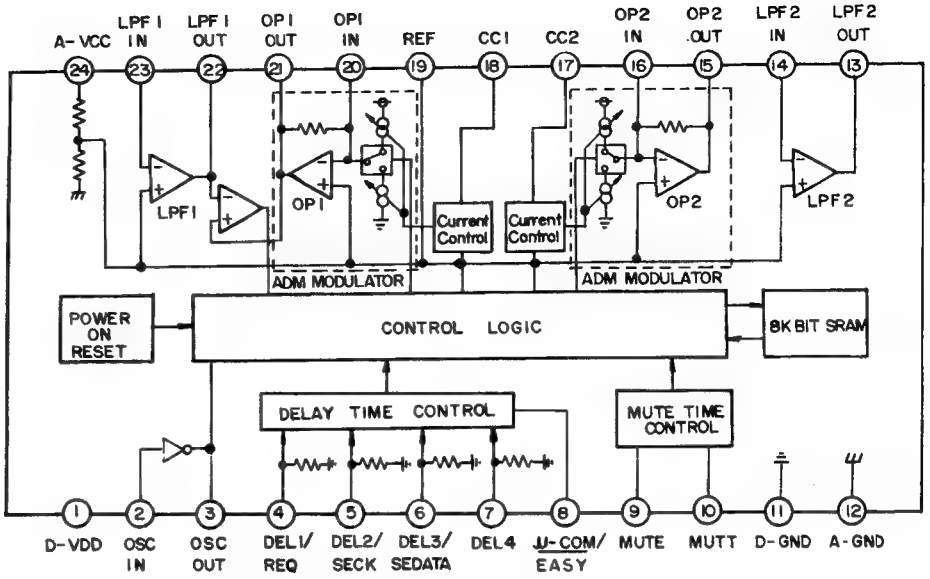

CTA7291S: IC301

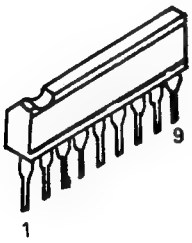

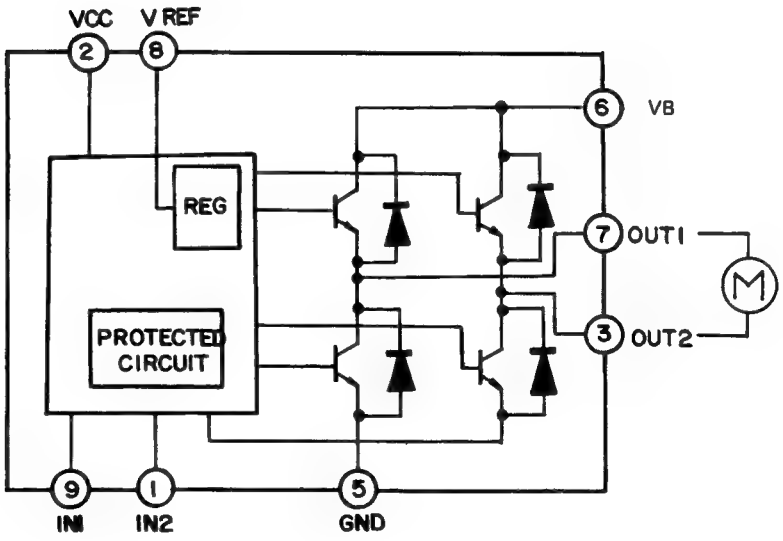

LC4966: IC704, IC705

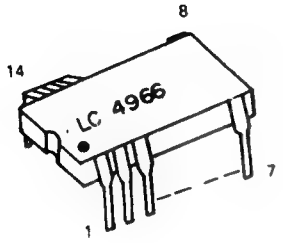

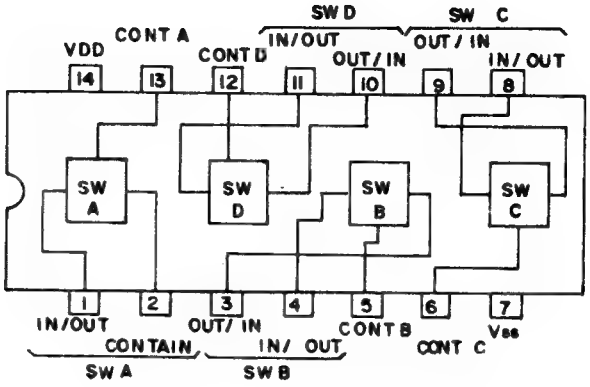

GD7815: IC209-IC211

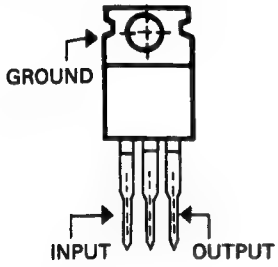

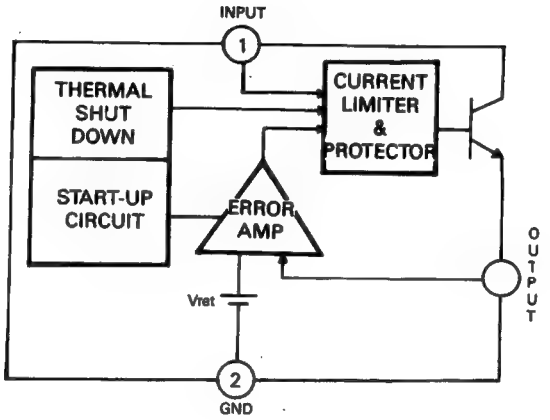

LM7001: IC103 (PLL IC)

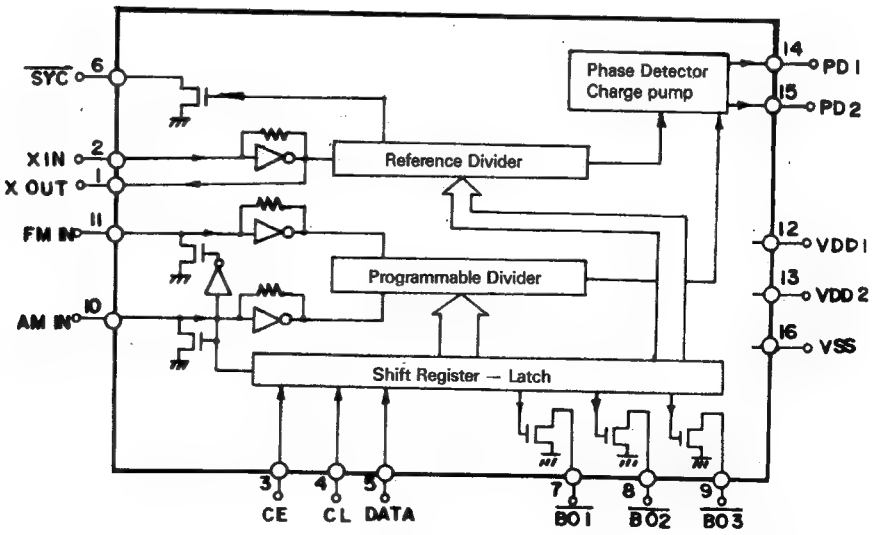

LC7821: IC203, IC204

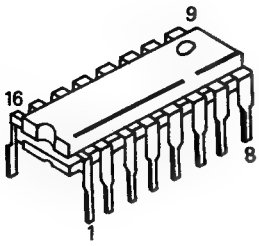

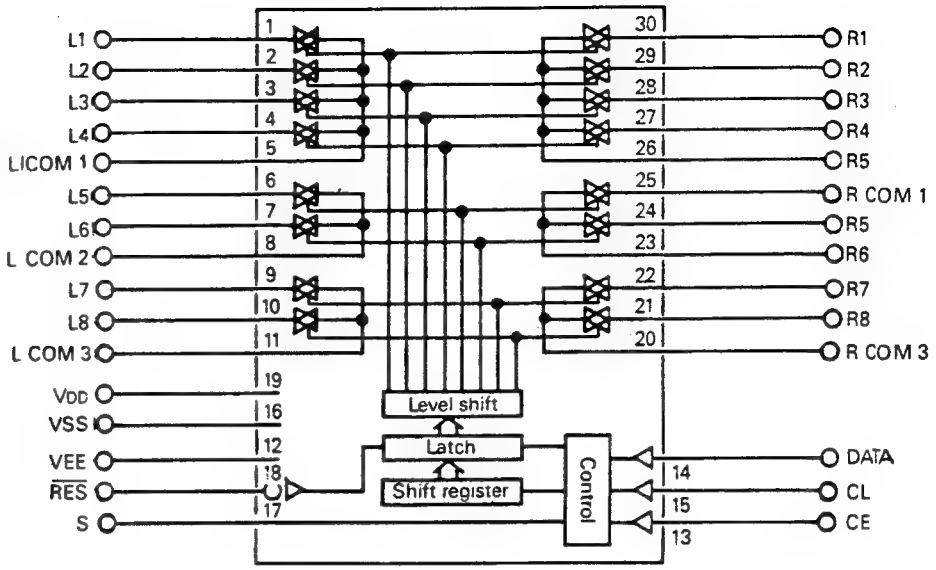

STK 4026II: IC802

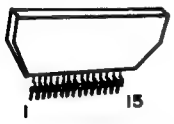

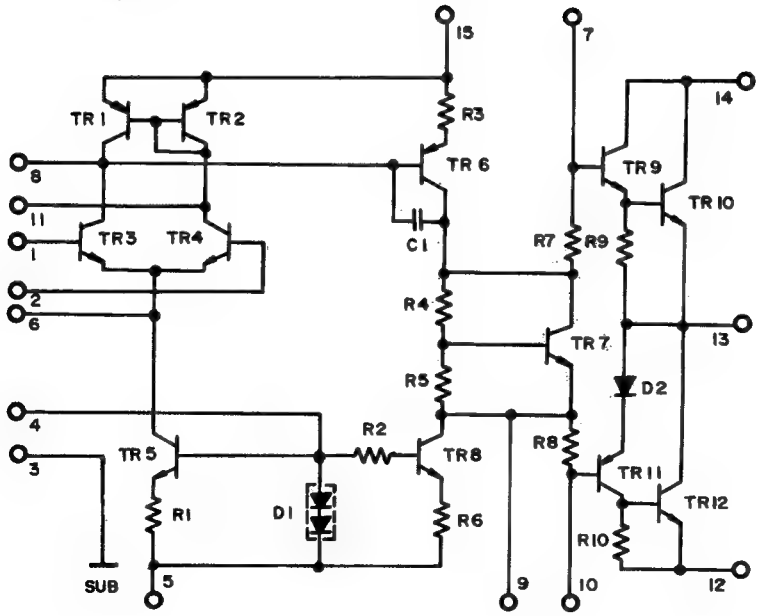

SSM2126: IC106

Table I. Control States for DM1-DM4

DM1	DM2	DM3	DM4	Operating State
1	1	1	1	Dolby 4-Channel ('Pro-Logic'), Autobalance On
1	1	0	1	Dolby 4-Channel ('Pro-Logic'), Autobalance Off
1	0	1	1	Dolby 3-Channel ('Dolby 3'), Autobalance On
1	0	0	1	Dolby 3-Channel ('Dolby 3'), Autobalance Off
0	1	1	1	Surround Channel Noise
0	1	1	0	Right Channel Noise
0	1	0	1	Center Channel Noise
0	1	0	0	Left Channel Noise
0	0	X	1	Mute
0	0	1	0	Stereo Bypass, Autobalance On
0	0	0	0	Stereo Bypass, Autobalance Off

Table II. Center Channel Functional Modes

CM1	CM2	Mode
0	0	Center Channel Off
0	1	Center Channel Wideband
1	0	Phantom Center Channel
1	1	Normal Center Mode

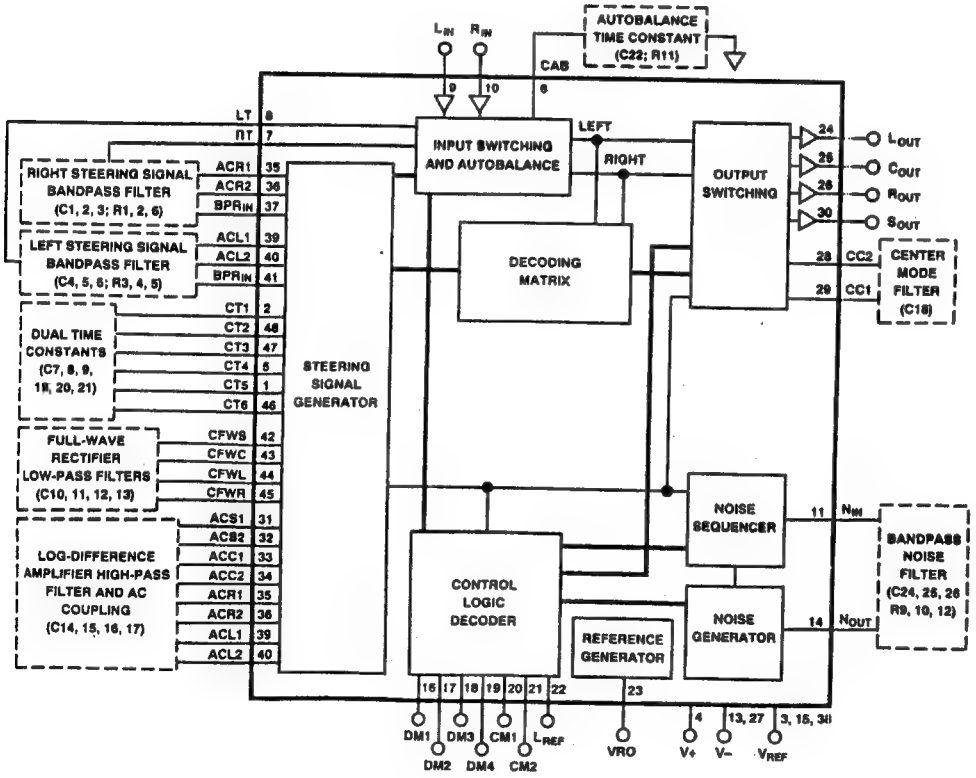

SSM2126: IC106 (Dual Supply Application)

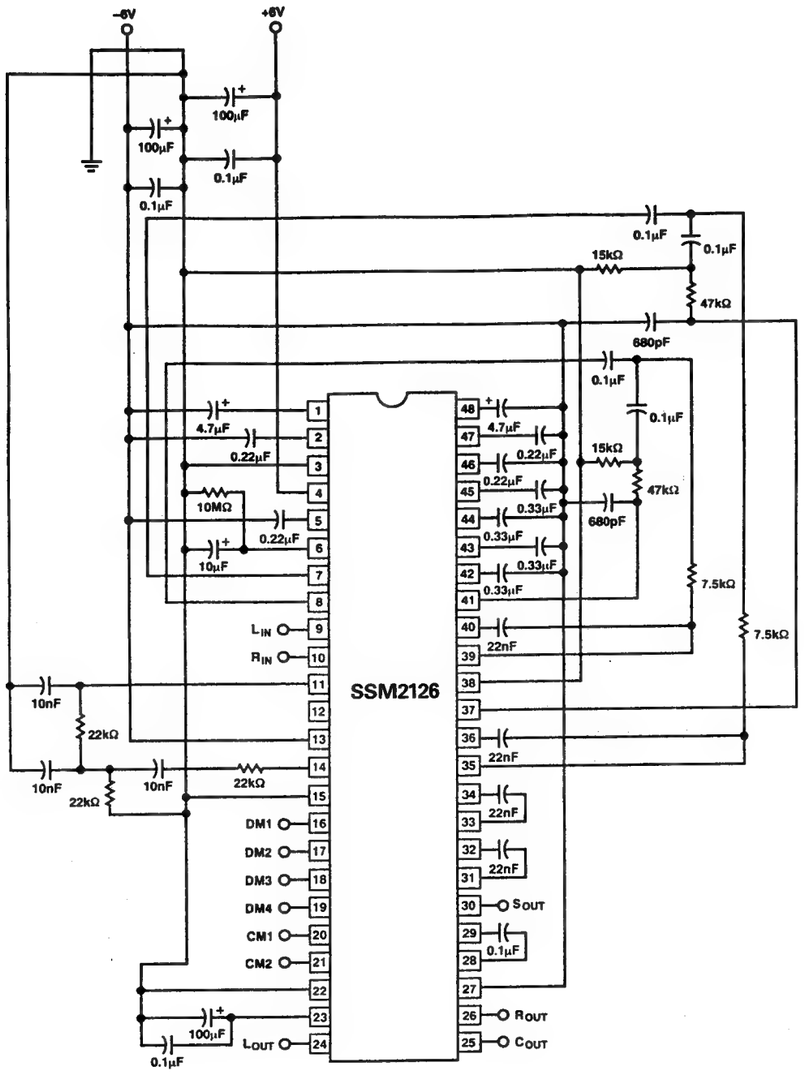

GD 4011B: IC1100

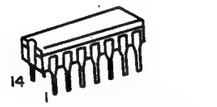

BLOCK DIAGRAM

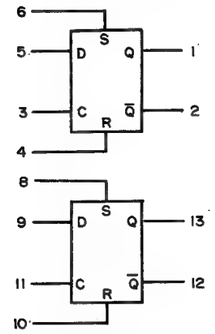

VDD = PIN 14
VSS = PIN 7

LOGIC DIAGRM
(1/2 of Device Shown)

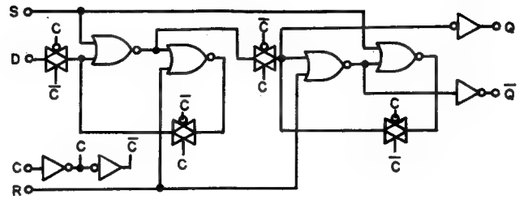

MC 14094B: IC206, IC707, IC708

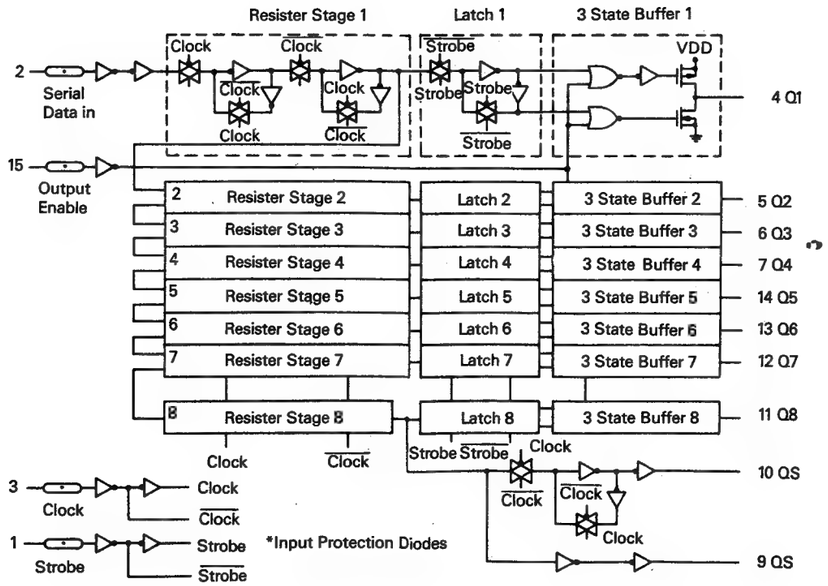

GD 4027B: IC1101

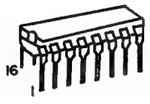

BLOCK DIAGRAM

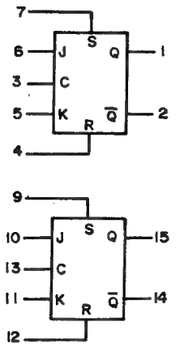

V_{DD} = Pin 16
V_{SS} = Pin 8

LOGIC DIAGRAM
(1/2 of Device Shown)

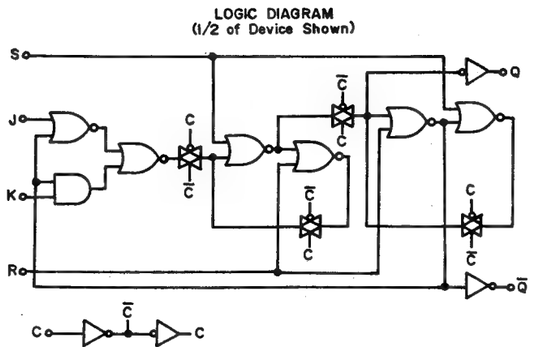

FRONT-END: FE 407-G60 (FOR DOM. VERSION ONLY)

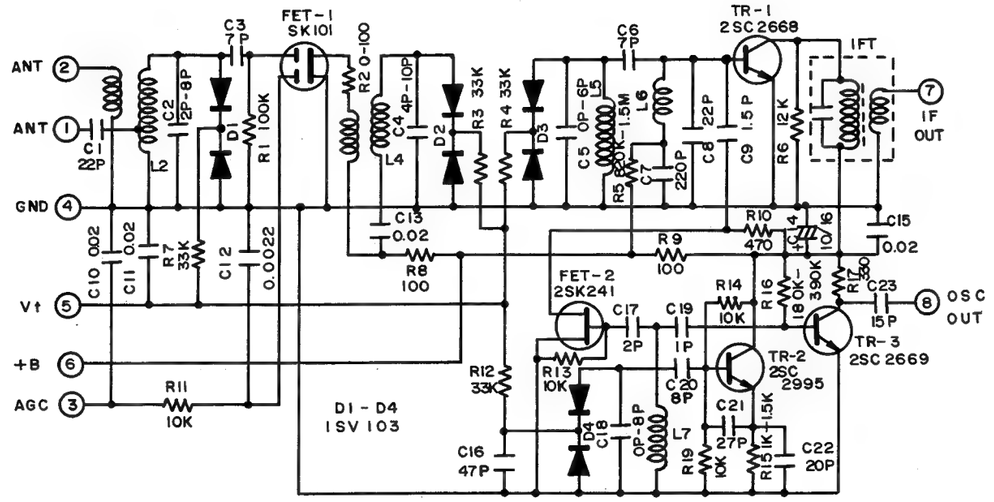

FRONT-END: FE 306-A15 (FOR A, DOM. VERSION ONLY)

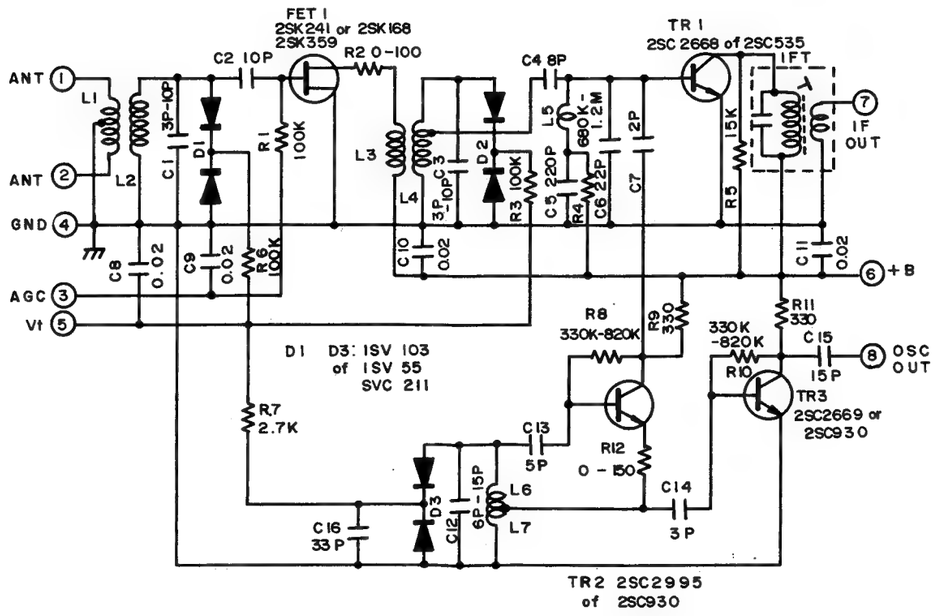

FRONT-END: FE 407-A15 (FOR C, E, F VERSION ONLY)

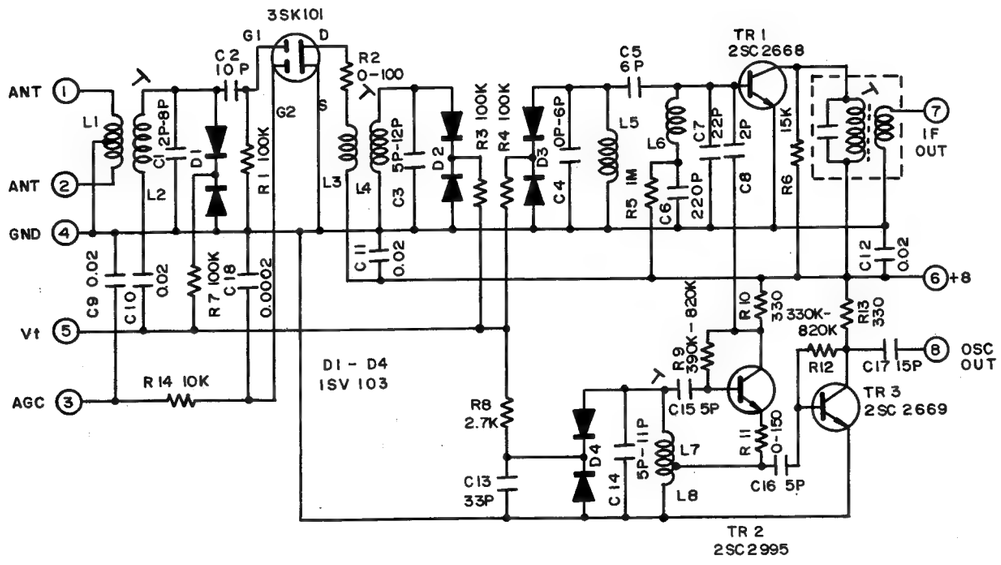

Schematic Diagram (I)

Model No.: RV-6010R

VERSION	A, B, C, E, F, DOM	D
C304 L/R	150P	20P
C404	39P	18P

VERSION	A	DOM	C, D, E, F
F801 L/R	NB3A	NB3A	F3.15A

* A: UL/CSA
C, D, E, F: EUROPE AUS
DOM : KOREA

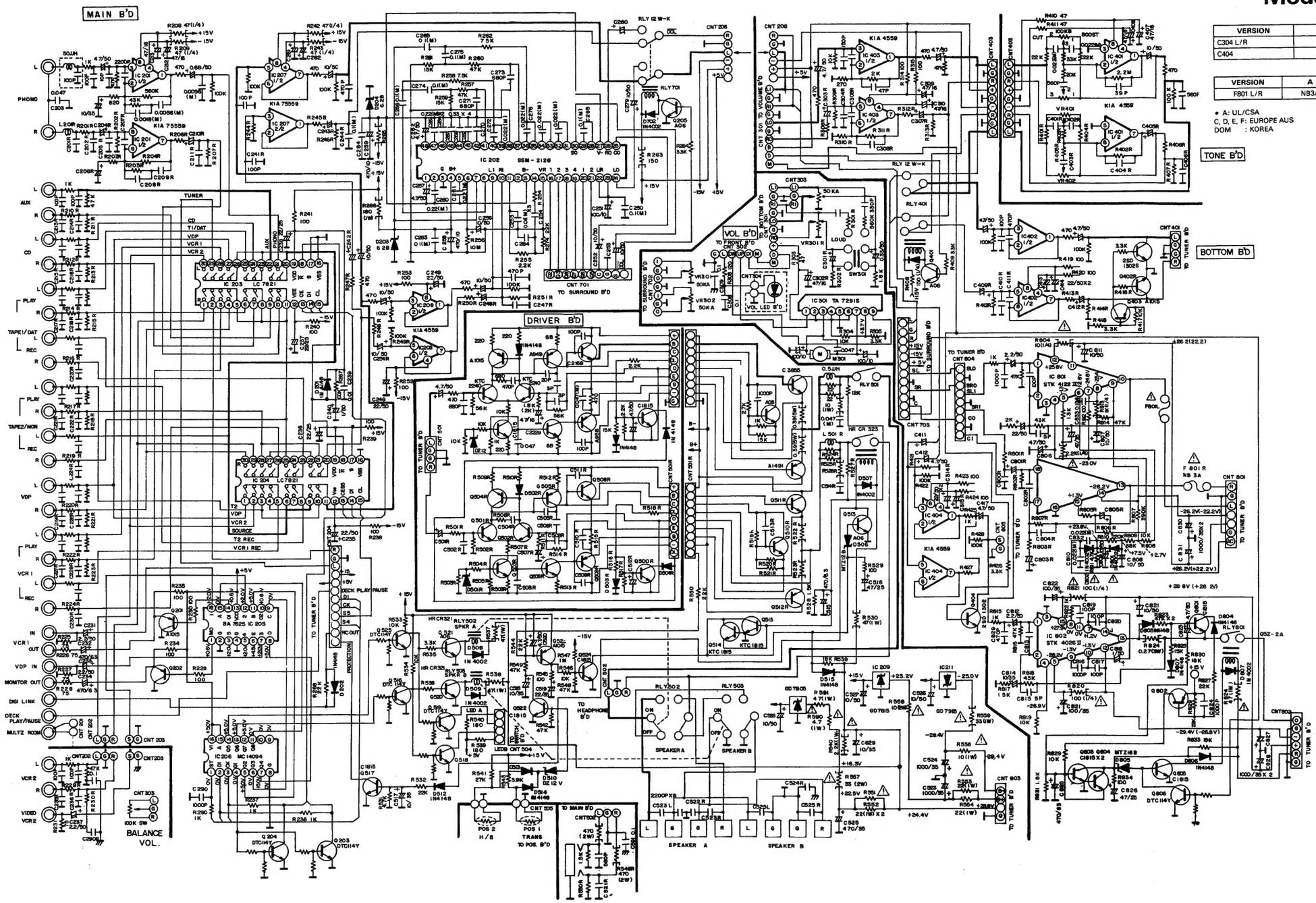
MAIN B'D
TUNER
DRIVER B'D
VOL B'D
TONE B'D
BOTTOM B'D
TO SURROUND B'D
TO TUNER B'D
TO VOLUME B'D
TO FRONT B'D
TO BOTTOM B'D
TO HEADPHONE B'D
TO MAIN B'D
TO POS. B'D
SPEAKER A
SPEAKER B
BALANCE VOL.
DECK PLAY/PAUSE
PHONO
AUX
CD
TAPE1/DAT
TAPE2/MON
VDP
VCR1
VCR2
MULTI ROOM
MONITOR OUT
DIGI LINK
IC 202 SSM-2125
IC 203 LC7821
IC 204 LC7821
IC 205 BA 7625
IC 206 MC 14094
IC 207 1/2
IC 208 1/2
IC 209
IC 211
IC 301 TA 72915
IC 401 1/2
IC 402 1/2
IC 403 1/2
IC 404 1/2
IC 801 STK 4122 II
IC 802 STK 4026 II
KIA 7559
KIA 4559
RLY 12 W-K
RLY 401
RLY 501
RLY 502
RLY 503
RLY 701
RLY 801
HR CR 321 RLY 502 SPKR A
HR CR 321 RLY 502 SPKR B
F 801 R NB 3A
F 801 R NB 3A
CNT 201
CNT 202
CNT 203
CNT 204
CNT 205
CNT 206
CNT 301
CNT 303
CNT 304
CNT 305
CNT 401
CNT 402
CNT 403
CNT 405
CNT 501 R
CNT 502 R
CNT 503
CNT 504
CNT 505
CNT 701
CNT 801
CNT 802
CNT 803
CNT 804
CNT 805
100K SW
POS 1
POS 2
TRANS
H/S
SOURCE
DECK PLAY/PAUSE
RC OUT
PROTECTION
SPKR A
SPKR B
LED A
LED B
LED CNT 504
VOL LED B'D
SW 301
SW 501
M 301
M 501
D 501 R
D 502 R
D 503 R
D 504 R
D 505 R
D 506 R
D 507
D 508
D 509
D 510 DZ 12 V
D 512
D 515
D 516
D 517
D 701
D 801
D 802
D 803
D 804
D 805
D 806
D 807
D 808
D 809
D 810
D 811
D 812
D 813
D 814
D 815
D 816
D 817
D 818
D 819
D 820
D

Schematic Diagram (II)

Model No.: RV-6010R

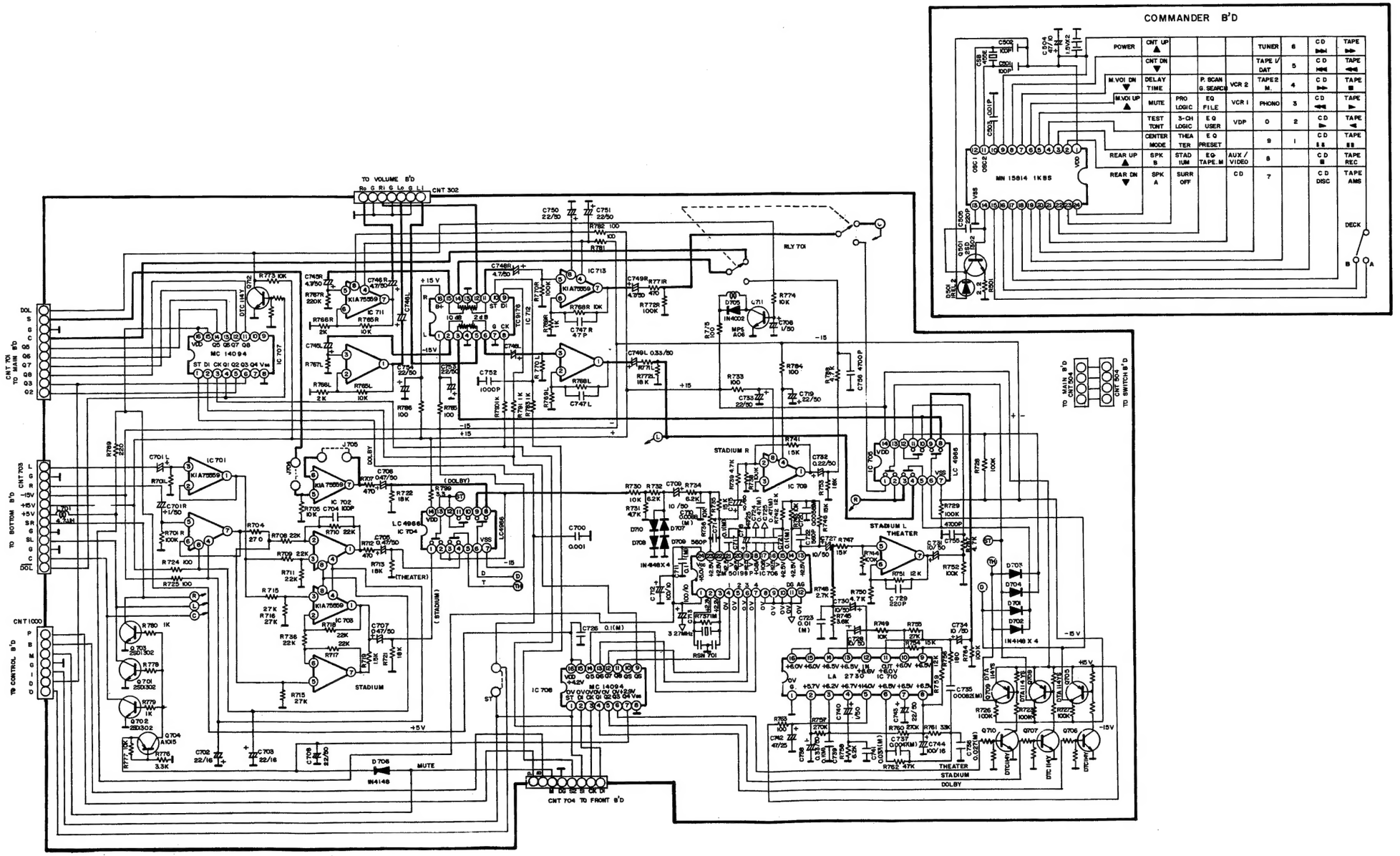

Schematic Diagram (III)

Model No.: RV-6010R

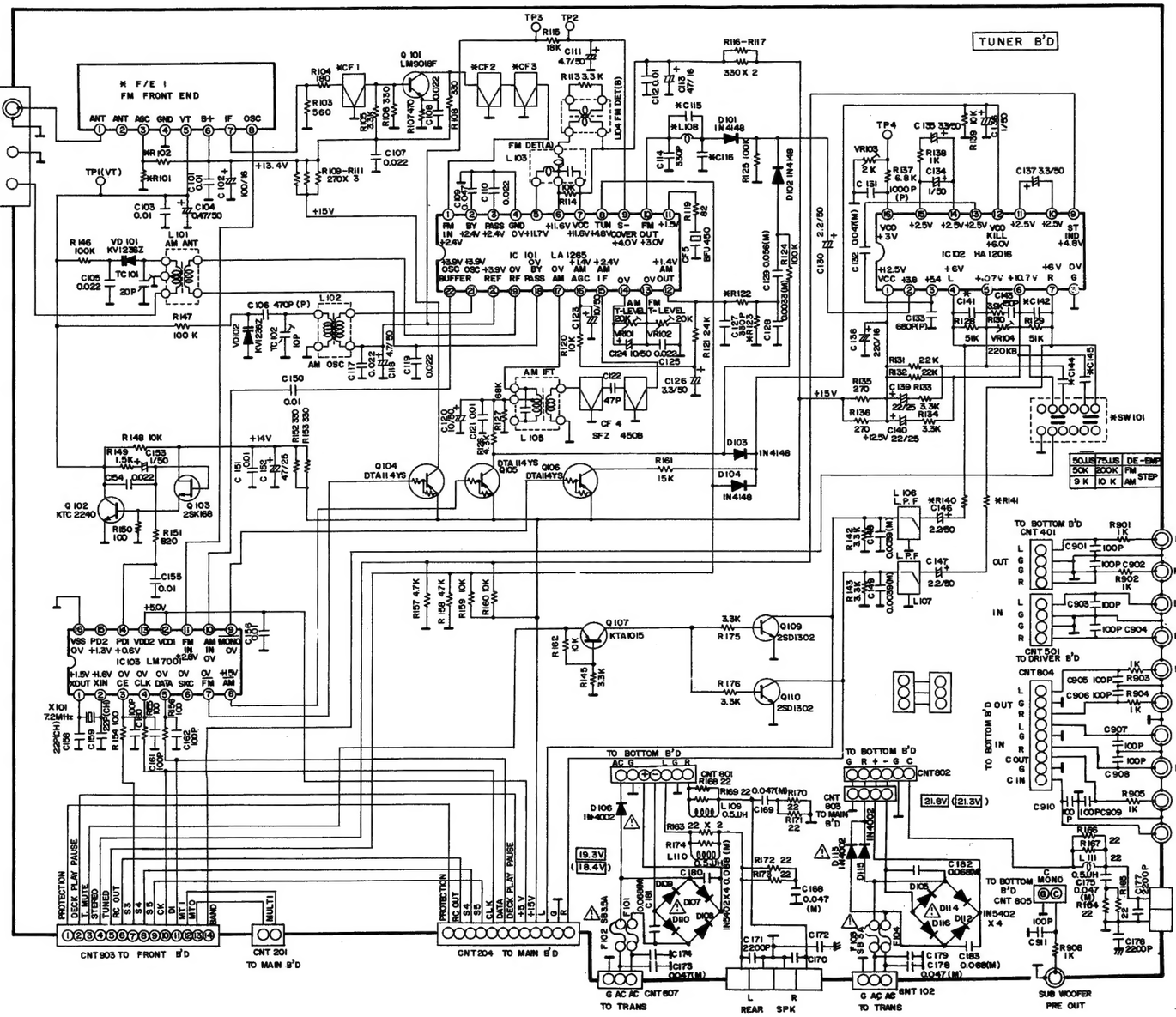

VERSION	(VT TPI)
UL/CSA	FM 1.5V-8.3V AM 1.2V-9.0V
EUROPE	FM 1.5V-8.4V
AUS	AM 1.2V-8.6V
KOREA	FM 1.5V-8.3V AM 1.2V-8.6V

*** REMARKS**

AREA NO.	US/KOR (A, DOM)	GERMANY (D)	EUR, UR, AUS (C, E, F)	MULTI (B)
*FE	FE306-A15	FE407-G60	FE407-A15	*
*R101	JUMPER	62 K	JUMPER	*
*R102	–	100 K	–	*
*CF1 CF2	10.7MA 8	10.7 MS3G	10.7 MS3G	*
*CF3	–	10.7 MS3G	–	*
*R115	18 K	47 K	*	*
*C115	JUMPER	100 pF	JUMPER	*
*L108	–	20.8 mH	–	–
*C116	–	100 pH	–	–
*R122	2.2 K	2.7 K	*	2.2 K
*R123	2.7 K	2.2 K	*	2.7 K
*C141 C142	0.0015 (M)	0.00 (M)	*	*
*SW101	–	–	–	0
R133 R134	3.3 K	1.8 K	*	3.3 K
R128 R129	51 K	47 K	47 K	51 K
C111	4.7/50	1/50	1/50	4.7/50
*C144 C145	–	–	–	470P
C158 C159	22 P (CH)	33 P (CH)	*	33 P (CH)

AREA NO.	U S A	EUR, AUS C, D, E, F	KOR DOM	MULTI B
F101	SB3.5A	T3.15A	NB3.5A	SB3.5A
F102	SB3.5A	T3.15A	NB3.5A	SB3.5A
F103	SB3A	T3.15A	NB3.5A	SB3A
F104	SB3A	T3.15A	NB3.5A	SB3A

NO.	GERMANY D
C901, C902, C903, C904, C905	100 pF
C906, C907, C908 C909, C910, C911	100 pF
C176, C177, C172, C170, C171	2200 pF
C173, C174, C178, C179	0.047JJF (M)

NOTES:

1. Resistance values are indicated in ohms unless. Otherwise specified (K=1,000 M=1,000,000)
2. Capacitance values are shown in microfarads unless otherwise noted (P=micro micro farads.)
3. DC : Value with no signal
   ▭ : AC RMS
   ( ) : AT 1kHz 8 ohm load

CAUTION:

Safety precautions to be followed during servicing.

1. Since those parts marked with ⚠ are critical parts for safety use the one described parts list.
   Before returning the receiver to the customer make appropriate leakage leakage current or resistance measurements to detemine that exposed parts are property insutated from the supply circuit.

Schematic Diagram (IV)

Model No.: RV-6010R

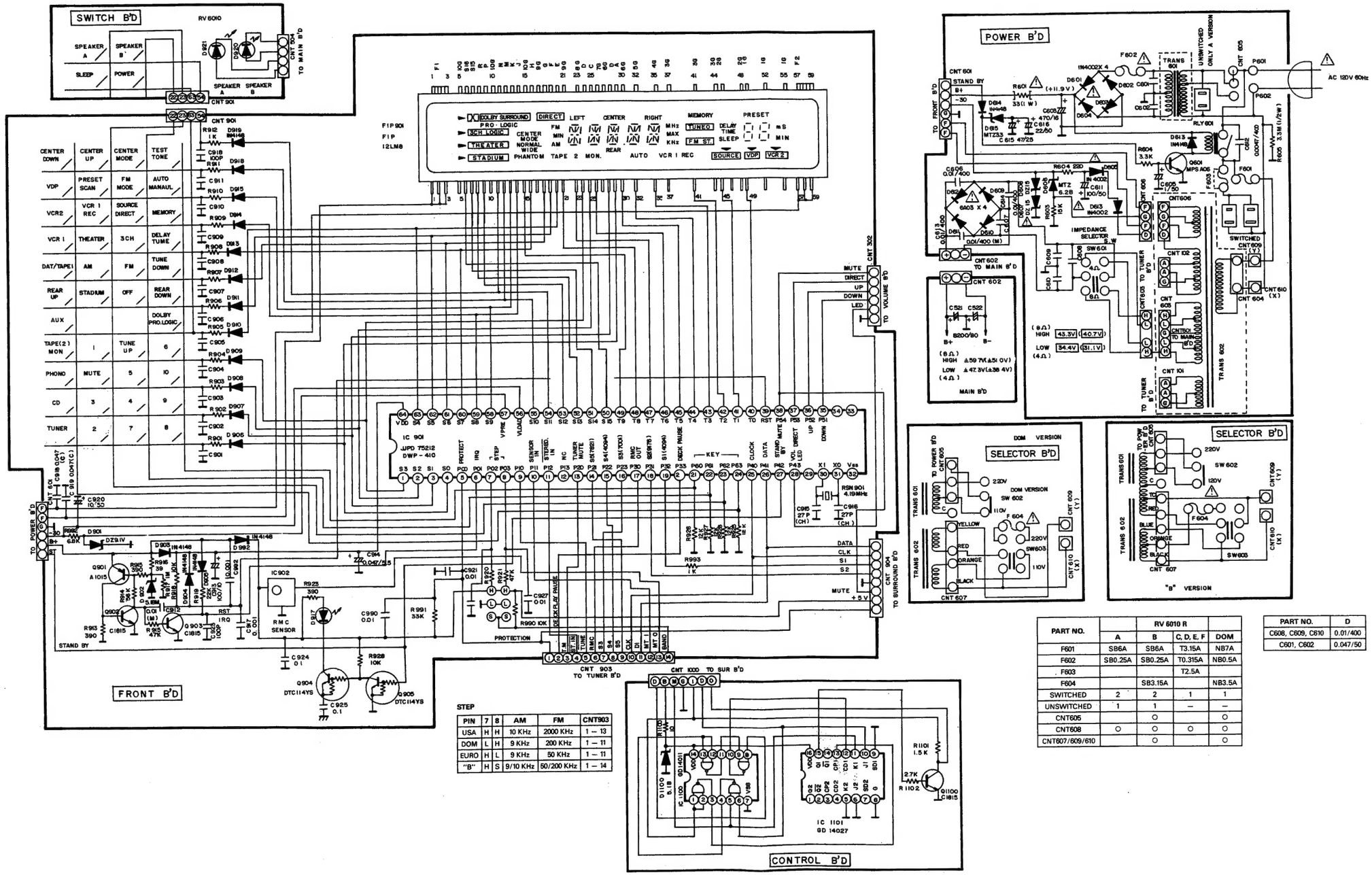

STEP

PIN	7	8	AM	FM	CNT903
USA	H	H	10 KHz	2000 KHz	1 — 13
DOM	L	H	9 KHz	200 KHz	1 — 11
EURO	H	L	9 KHz	50 KHz	1 — 11
"B"	H	S	9/10 KHz	50/200 KHz	1 — 14

PART NO.		RV 6010 R		
	A	B	C, D, E, F	DOM
F601	SB6A	SB6A	T3.15A	NB7A
F602	SB0.25A	SB0.25A	T0.315A	NB0.5A
F603			T2.5A	
F604		SB3.15A		NB3.5A
SWITCHED	2	2	1	1
UNSWITCHED	1	1	—	—
CNT605		○		○
CNT608	○	○	○	○
CNT607/609/610		○		○

PART NO.	D
C608, C609, C610	0.01/400
C601, C602	0.047/50