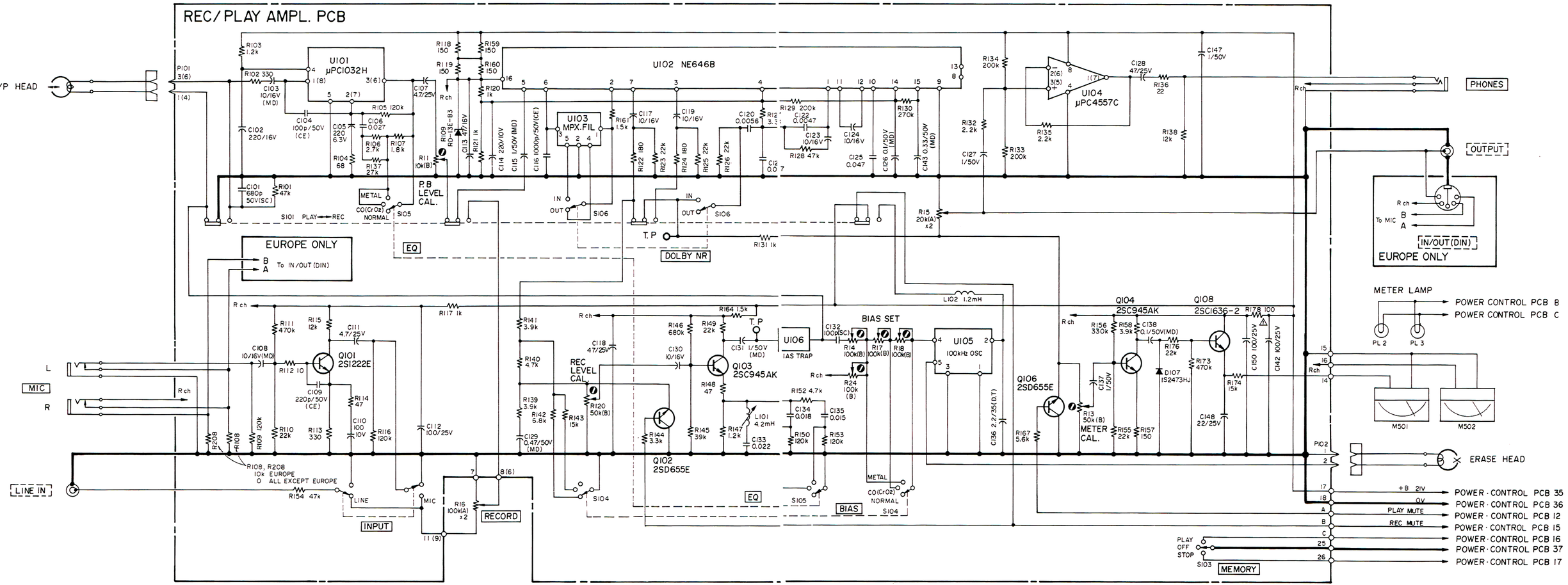
REC/PLAY AMPL. PCB
R/P HEAD
U101 μPC1032H
U102 NE646B
U103 MPX.FIL
U104 μPC4557C
U105 100kHz OSC
U106 IAS TRAP
Q101 2SI222E
Q102 2SD655E
Q103 2SC945AK
Q104 2SC945AK
Q106 2SD655E
Q108 2SC1636-2
D107 IS2473HJ
PHONES
OUTPUT
IN/OUT(DIN)
EUROPE ONLY
To MIC
METER LAMP
POWER CONTROL PCB B
POWER CONTROL PCB C
ERASE HEAD
+B 21V
0V
PLAY MUTE
REC MUTE
POWER · CONTROL PCB 35
POWER · CONTROL PCB 36
POWER · CONTROL PCB 12
POWER · CONTROL PCB 15
POWER · CONTROL PCB 16
POWER · CONTROL PCB 37
POWER · CONTROL PCB 17
MIC
LINE IN
INPUT
RECORD
EQ
DOLBY NR
BIAS
MEMORY
P.B LEVEL CAL.
REC LEVEL CAL.
METER CAL.
BIAS SET
S101 PLAY ⟷ REC
S103 PLAY OFF STOP
S104
S105
S106
R108, R208 10k EUROPE 0 ALL EXCEPT EUROPE

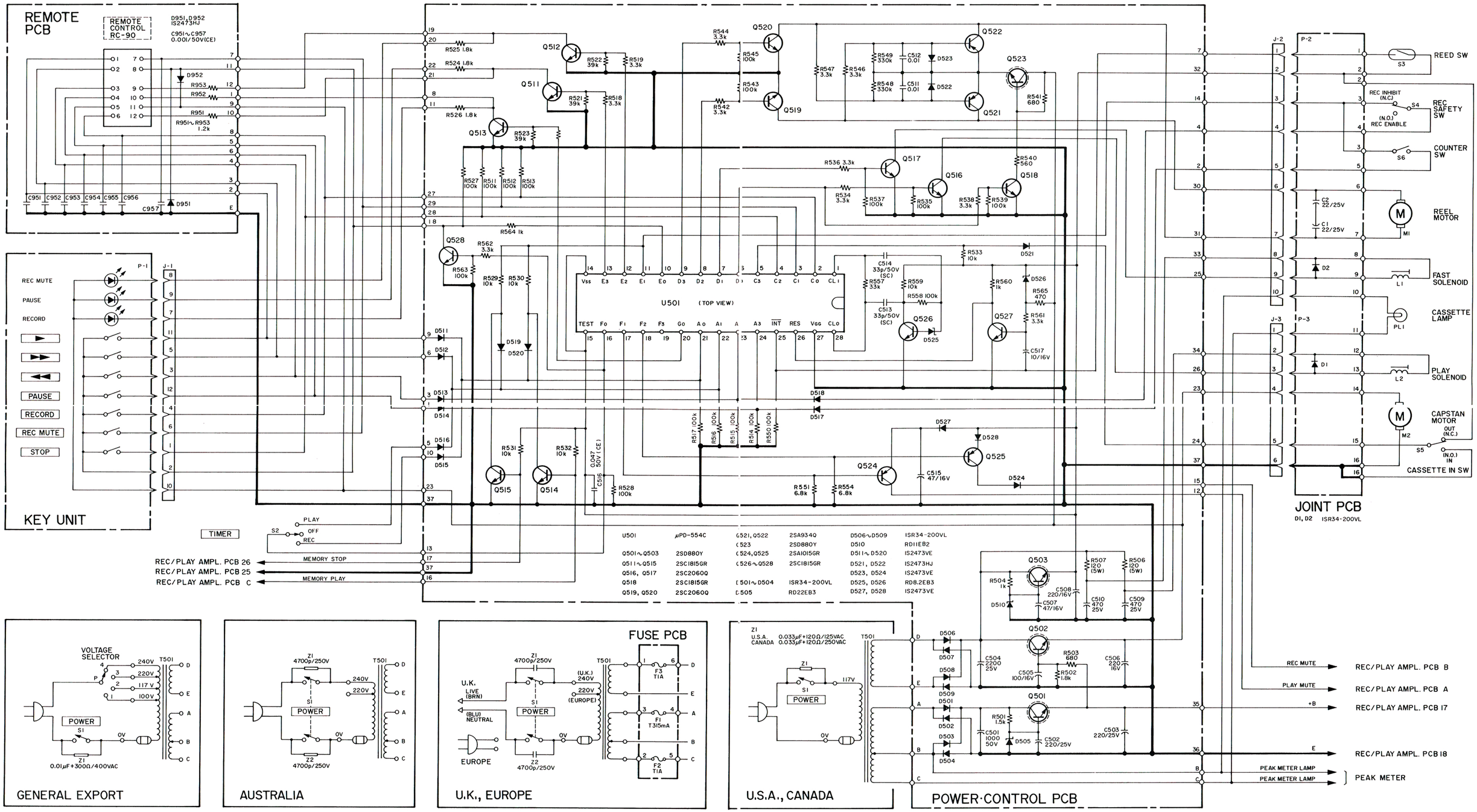
REMOTE PCB
REMOTE CONTROL RC-90
D951, D952 IS2473HJ
C951~C957 0.001/50V(CE)
KEY UNIT
REC MUTE
PAUSE
RECORD
STOP
TIMER
S2
PLAY
OFF
REC
REC/PLAY AMPL. PCB 26
REC/PLAY AMPL. PCB 25
REC/PLAY AMPL. PCB C
MEMORY STOP
MEMORY PLAY
U501 (TOP VIEW)
U501 μPD-554C
Q501~Q503 2SD880Y
Q511~Q515 2SC1815GR
Q516, Q517 2SC2060Q
Q518 2SC1815GR
Q519, Q520 2SC2060Q
Q521, Q522 2SA9340
Q523 2SD880Y
Q524, Q525 2SA1015GR
Q526~Q528 2SC1815GR
D501~D504 ISR34-200VL
D505 RD22EB3
D506~D509 ISR34-200VL
D510 RD11EB2
D511~D520 IS2473VE
D521, D522 IS2473HJ
D523, D524 IS2473VE
D525, D526 RD8.2EB3
D527, D528 IS2473VE
REED SW
REC INHIBIT (N.C.)
REC SAFETY SW
(N.O.) REC ENABLE
COUNTER SW
REEL MOTOR
FAST SOLENOID
CASSETTE LAMP
PLAY SOLENOID
CAPSTAN MOTOR
OUT (N.C.)
(N.O.) IN
CASSETTE IN SW
JOINT PCB
D1, D2 ISR34-200VL
REC MUTE
PLAY MUTE
+B
REC/PLAY AMPL. PCB B
REC/PLAY AMPL. PCB A
REC/PLAY AMPL. PCB 17
REC/PLAY AMPL. PCB 18
PEAK METER LAMP
PEAK METER
POWER·CONTROL PCB
VOLTAGE SELECTOR
240V
220V
117V
100V
POWER
0.01μF+300Ω/400VAC
GENERAL EXPORT
4700p/250V
AUSTRALIA
FUSE PCB
U.K. LIVE (BRN)
(BLU) NEUTRAL
EUROPE
(U.K.) 240V
220V (EUROPE)
F3 T1A
F1 T315mA
F2 T1A
U.K., EUROPE
U.S.A. CANADA
0.033μF+120Ω/125VAC
0.033μF+120Ω/250VAC
117V
U.S.A., CANADA

TEAC®