MODEL SA-5800

PANASONIC® Service Manual

100W FM/AM SOLID STATE STEREO RECEIVER

ISO

MODEL SA-5800

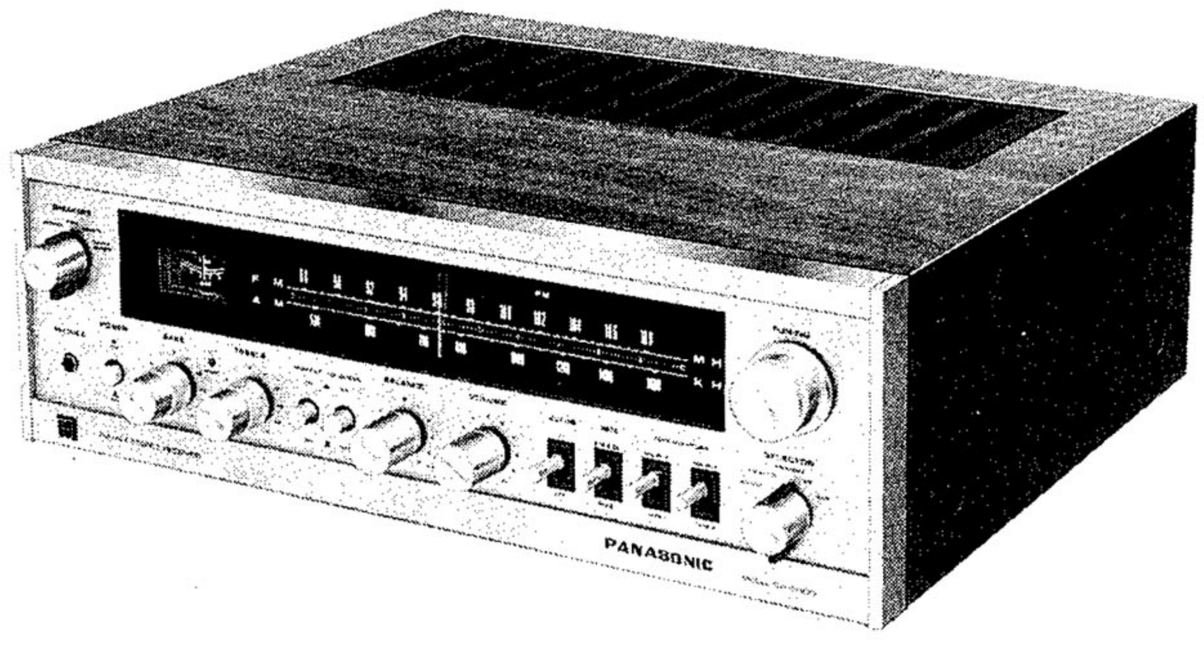

SPECIFICATIONS (Specifications are subject to change without notice.)

AUDIO SECTION

IHF Music Power:	100 W (4 Ω)
	75 W (8 Ω)
RMS Power:	37/37 W (4 Ω)
	27/27 W (8 Ω)
Harmonic Distortion:	0.5%
Intermoduration Distortion (60 Hz + 7 kHz = 4 : 1, SMPTE):	0.7%
Power Bandwidth:	5 Hz ~ 40 kHz −3 dB
Frequency Response:	
Phono	RIAA ±1dB
Auxiliary	15 Hz ~ 65 kHz $^{+0}_{-3}$ dB
Input Sensitivity and Impedance:	
Phono	2 mV (50 KΩ)
Auxiliary	180 mV (50 KΩ)
Tape Monitor 1, 2	180 mV
Residual Hum & Noise:	1.5 mV
S/N (IHF, A)	
Phono	70 dB
Auxiliary	90 dB
Bass Range:	$^{+13}_{-14}$ dB (50 Hz)
Treble Range:	±10 dB (10 kHz)
High Filter:	5 kHz −6 dB/oct
Damping Factor:	70 (8 Ω)
Recorder Output Level:	180 mV
Loudness Control:	+11 dB (50 Hz)
	+ 4 dB (10 kHz)

FM TUNER SECTION

Frequency Range:	88 ~ 108 MHz
FM Usable Sensitivity (IHF):	1.8 μV
FM Harmonic Distortion (at 400 Hz, 100% Modulation):	0.4%
Signal to Noise Ratio:	60 dB
Selectivity, Alternate Channel:	80 dB
Spurious Response Rejection (at 98 MHz):	75 dB
IF Rejection (at 98 MHz):	100 dB
Image Rejection (at 98 MHz):	90 dB
AM Suppression (at 98 MHz):	45 dB
FM Stereo Separation (at 1 kHz):	35 dB
Capture Ratio (IHF):	1.5 dB
Frequency Response:	30 Hz ~ 13 kHz, ±1 dB

AM TUNER SECTION

Frequency Range:	525 ~ 1605 kHz
AM Sensitivity (IHF):	15 μV
Selectivity (at 1000 kHz and ±10 kHz):	30 dB
Image Rejection (at 1000 kHz):	65 dB
IF Rejection (at 1000 kHz):	70 dB

GENERAL

Power Consumption:	110 W
Dimensions (Including control knobs and fuse post):	16″ (Wide) × 5½″ (High) × 14″ (Deep)
Weight	24 lbs.
Power Supply:	AC 120 V, 60 Hz

MATSUSHITA ELECTRIC CORP. OF AMERICA Pan-Am Bldg. 200 Park Ave., New York, N.Y. 10017
MATSUSHITA ELECTRIC OF HAWAII, INC. 320 Waiakamilo Road, Honolulu, Hawaii 96817
MATSUSHITA ELECTRIC OF CANADA LTD. 40 Ronson Drive, Rexdale, Ont.

www.hifiengine.com

Driver & Power Supply Circuit Board

⊕ Line Earth Line

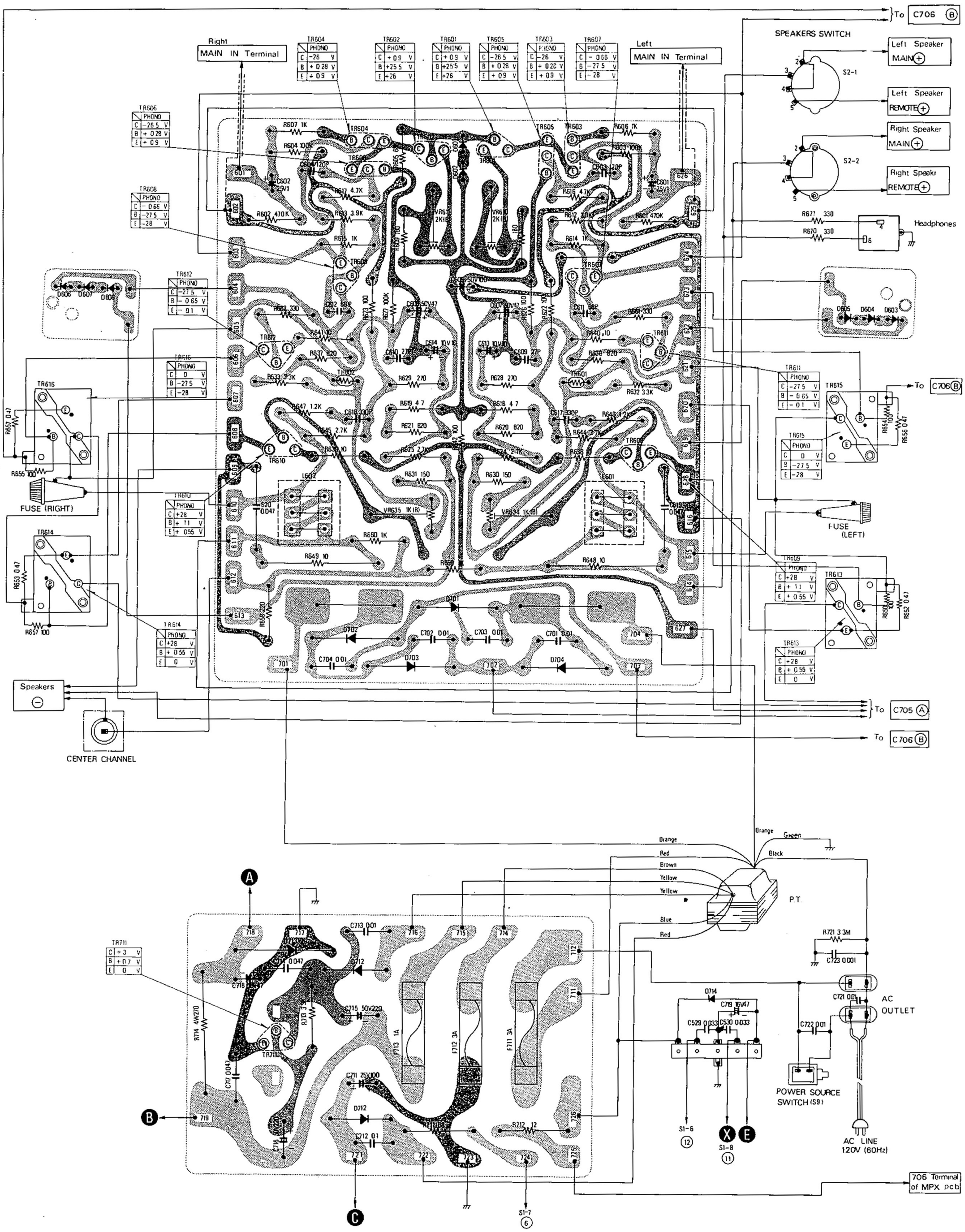

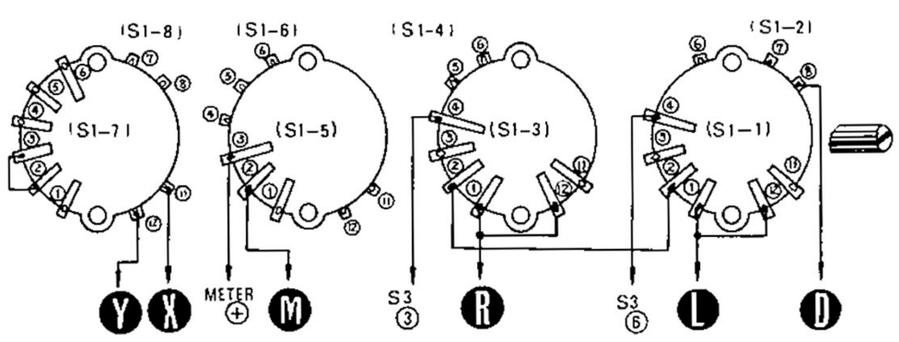

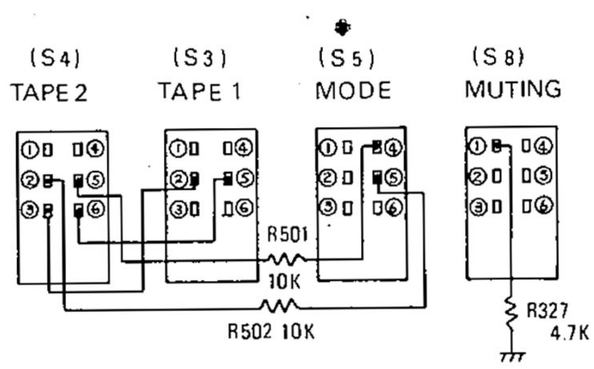

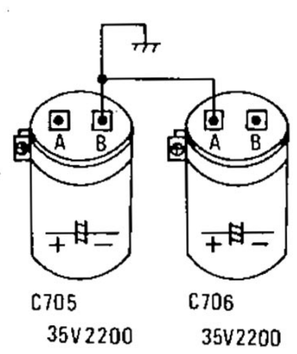

■ ALIGNMENT POINTS

Main Amp Alignment

⇩

AM/FM-RF Alignment
AM/FM-IF & Stereo Alignment

⇩

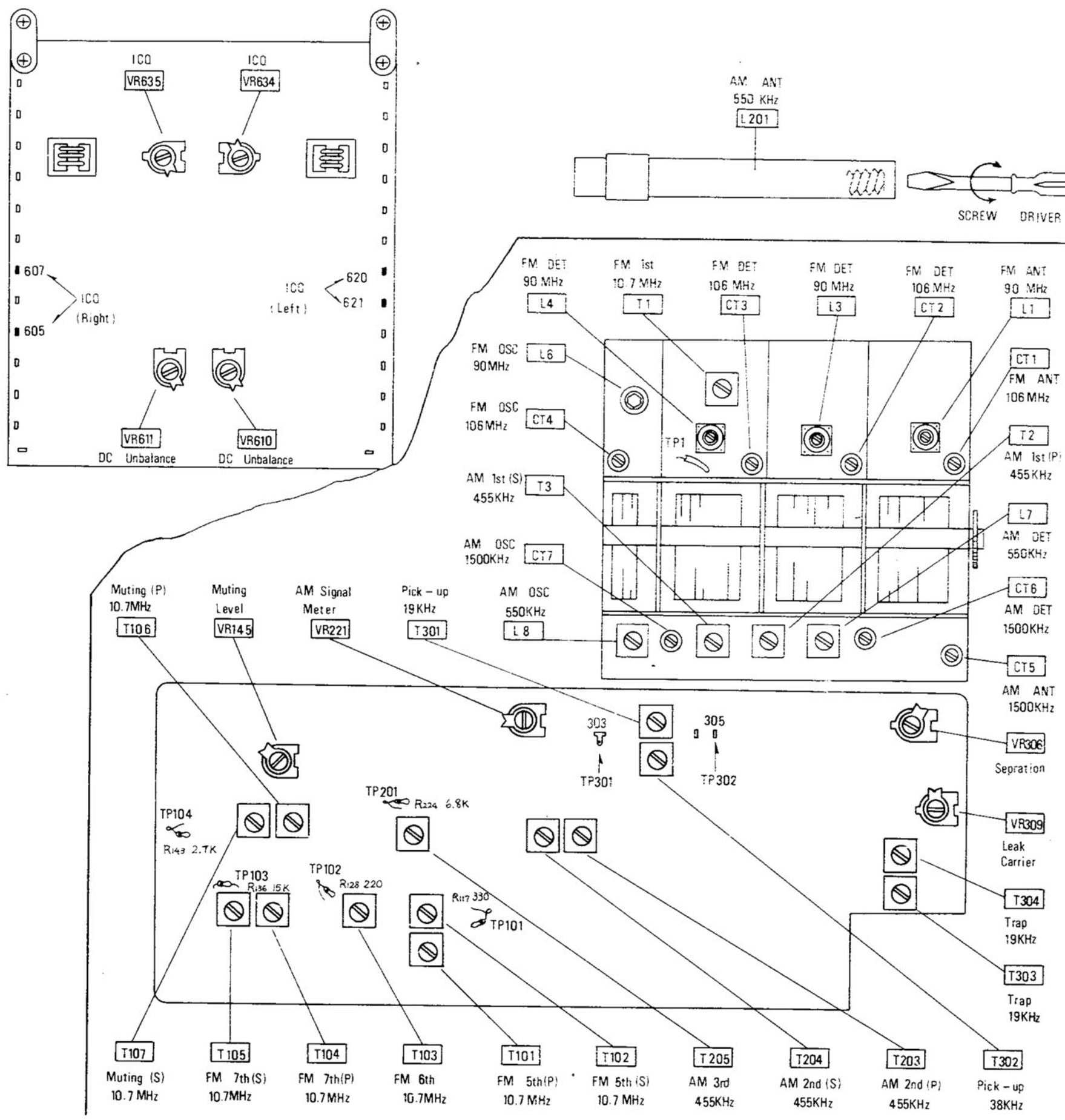

■ LOCATION OF CIRCUIT BOARD

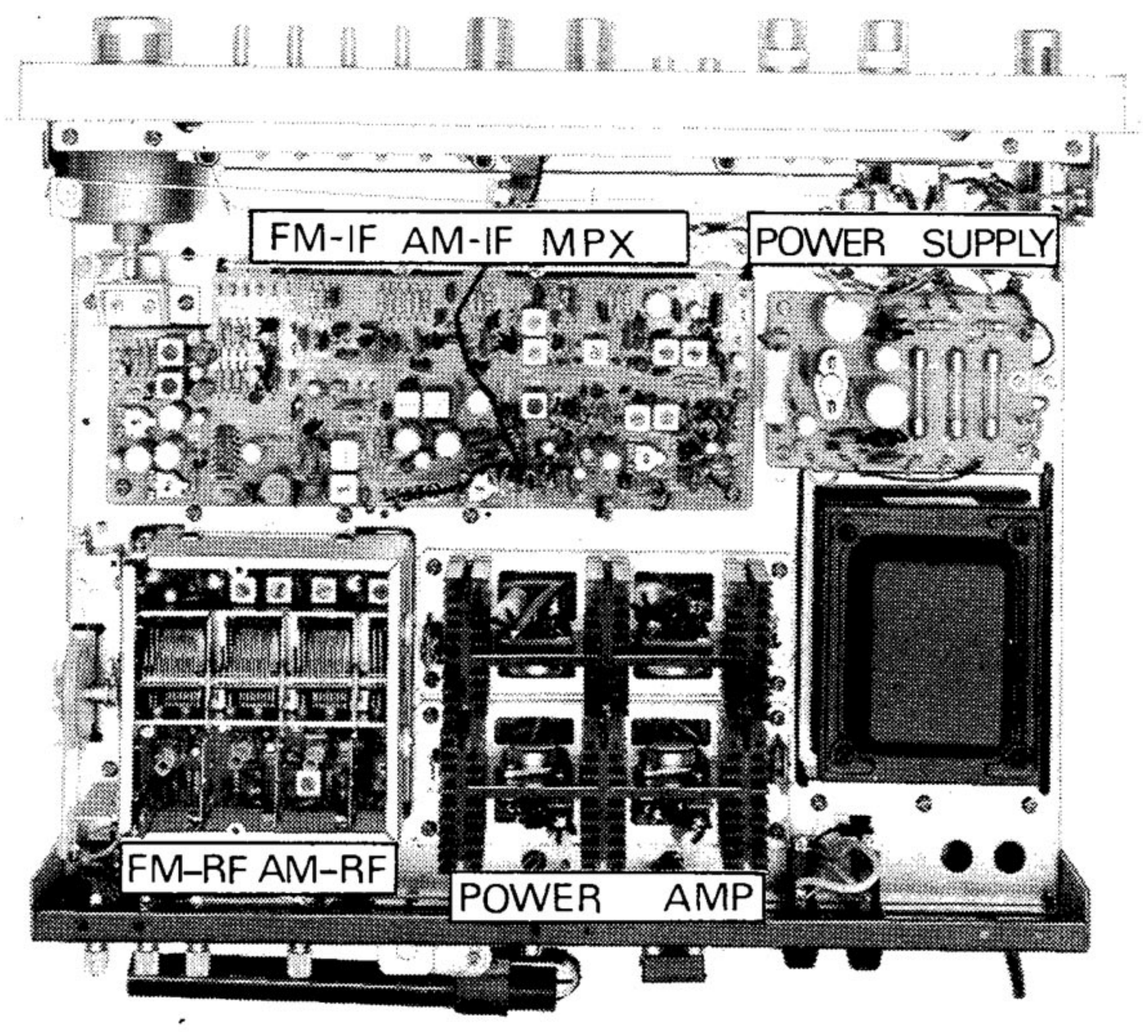

Top View

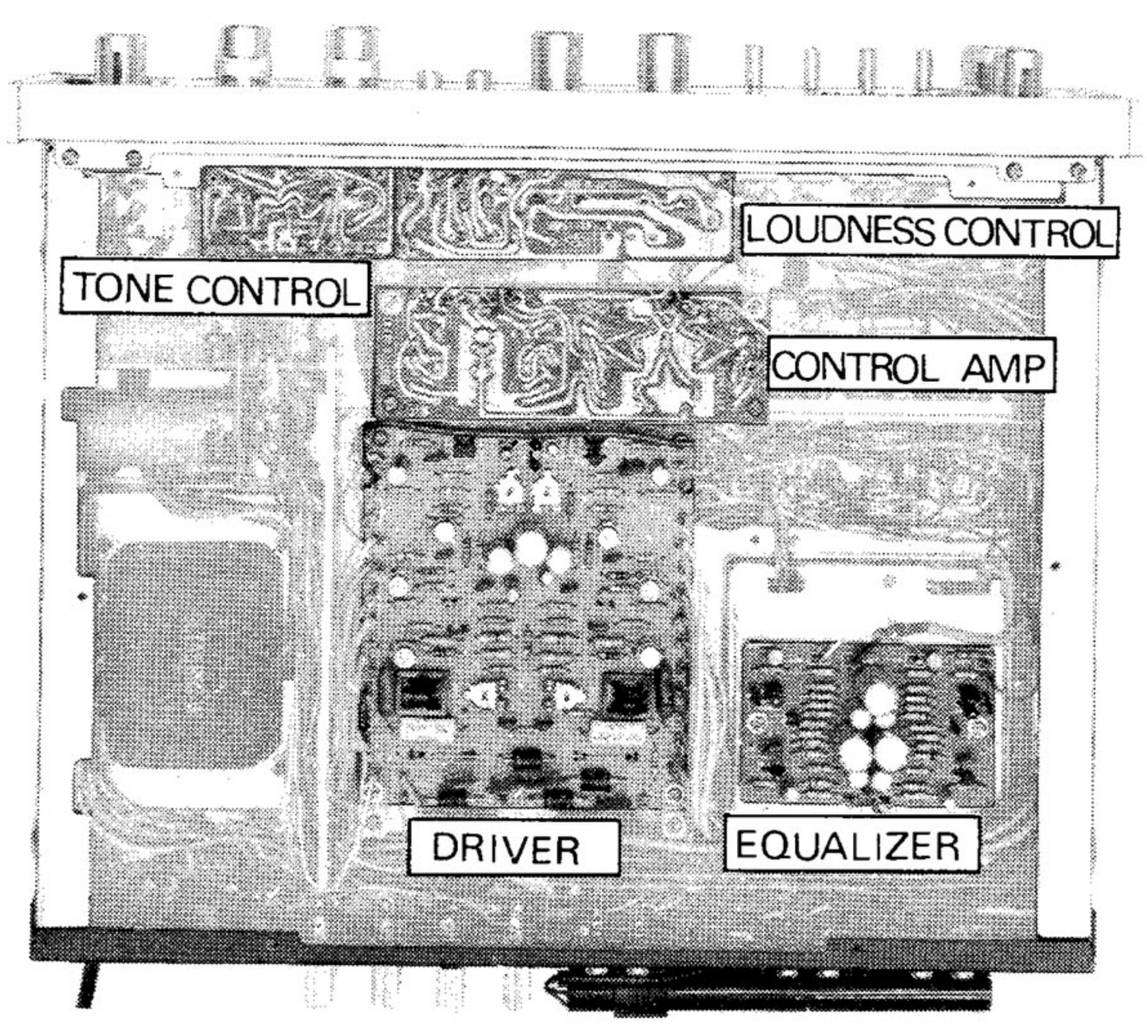

Bottom View

www.hifiengine.com

ALIGNMENT INSTRUCTIONS-READ CAREFULLY BEFORE ATTEMPTING ALIGNMENT

Notes :

1. Volume control ..... Minimum
2. Speakers switch..... Main
3. Other controls .....Optional position
4. Maintain line voltage at 120 volts.
5. Before the adjustment, I_{CQ} adjusting volumes (VR_{634}, and VR_{635}) should be turned to the left side completely.

	CIRCUIT	VTVM CONNECTION	ADJUSTMENT	REMARKS
	MAIN AMP ALIGNMENT			
1	DC UNBALANCE	Connect VTVM to speakers terminal.	VR_{610} (Left) VR_{611} (Right)	Make sure that VTVM become 0V.
2	I_{CQ}	Connect to No. 620⊕, 621⊖ (left) and No. 605⊕, 607⊖ (right) terminals.	VR_{634} (Left) VR_{635} (Right)	Make adjustments so that the indication on VTVM becomes 12.5 mV.

Notes :

1. Volume control ..... Maximum (AM-RF)
   Minimum (AM-IF, FM-IF)
   Variable (FM-RF)
2. Bass and treble control ..... Center
3. Band selector switch ..... AM, FM-Mono (FM-IF)
   FM-Auto (FM-RF)
4. Loudness switch ..... OFF
5. Muting switch..... OFF
6. High filter switch ..... OFF
7. Tape-monitor switch ..... Source
8. Mode switch .....Stereo
9. Speakers switch..... Main or Remote
10. Maintain line voltage at 120 volts.
11. Output of signal generator should be no higher than necessary to obtain an output reading.

	SIGNAL GENERATOR or SWEEP GENERATOR CONNECTION	FREQUENCY	RCVR. DIAL SETTING [DISTANCE]	INDICATOR (VTVM or SCOPE)	ADJUSTMENT	REMARKS
	AM ALIGNMENT					
3	——	——	——	Signal meter of set.	VR_{211}	Adjust for "0" signal meter indication.
4	High side through 0.001 mfd to antenna terminal, Common to chassis.	455 kHz (20 kHz Sweep)	Point of non-interference (on/about 600 kHz)	Connect vert. amp. of scope to **TP**$_{201}$.	T_2 (1st IFT) (P) T_3 (1st IFT) (S) T_{203} (2nd IFT) (P) T_{204} (2nd IFT) (S) T_{205} (3rd IFT)	Adjust for maximum output.
5	Fashion loop of several turns of wire and radiate signal into loop of receiver.	550 kHz (30% Mod. with 400 Hz)	550 kHz [20.5mm (25/32")]	Connect meter to main speakers terminal of set.	L_8 (OSC Coil) L_{201} (ANT Coil) L_7 (DET Coil)	Adjust for maximum output. Adjust L_{201} by ferrite core.
6	〃	1500 kHz (〃)	1500 kHz [160.2mm (6 5/16")]	〃	CT_7 (OSC Trimmer) CT_5 (ANT Trimmer) CT_6 (DET Trimmer)	Adjust for maximum output. Repeat steps (5) and (6)
	FM-IF, TUNING METER AND MUTING CIRCUIT ALIGNMENT					
7	High side through 0.001 mfd. to **TP**$_1$.	10.7 MHz (400 kHz Sweep)	Point of non-interference. (on/about 90 MHz)	Connect vert. amp. of scope through detector to FM-IF p.c.b. **TP**$_{101}$, Common to chassis. (Refer to fig. 1)	T_1 (FM 1st IFT)	Adjust for maximum amplitude and proper linearity between ±100 kHz markers. (Refer to fig. 2)
8	〃	〃	〃	Connect scope through detector to **TP**$_{102}$.	T_{101} (FM 5th IFT) (P) T_{102} (FM 5th IFT) (S) T_{103} (FM 6th IFT)	〃
9	〃	〃	〃	Tuning meter of set.	T_{105} (FM 7th IFT) (S)	Adjust for center of tuning meter indication. (Refer to fig. 3)
10	〃	〃	〃	Connect vert. amp. of scope to **TP**$_{103}$.	T_{104} (FM 7th IFT) (P)	Adjust T_{104} so that 10.7 MHz marker appears at the center. (Refer to fig. 4)
11	〃	〃	〃	Connect vert. amp. of scope to **TP**$_{104}$.	T_{106} (Muting IFT) (P) T_{107} (Muting IFT) (S)	Adjust for maximum sharp and proper linearity. (Refer to fig. 2)

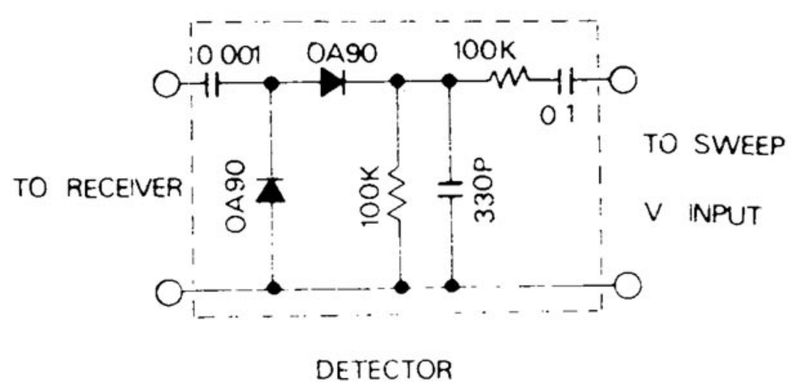

Fig. 1

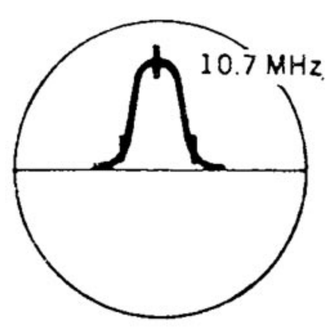

Fig. 2

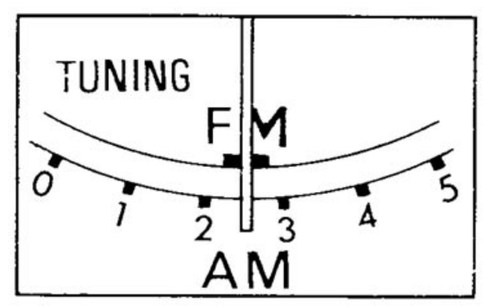

Fig. 3

www.hifiengine.com

	SIGNAL GENERATOR CONNECTION	SIGNAL GENERATOR FREQUENCY	RCVR. DIAL SETTING (DISTANCE)	INDICATOR VTVM or SCOPE	ADJUSTMENT	REMARKS
	FM-RF ALIGNMENT					
12	Connect to FM antenna terminal through FM dummy antenna. (Refer to fig. 5)	90 MHz (30% Mod. with 400 Hz)	90 MHz (21.3mm (27/32"))	Output meter across speaker terminals.	L6 (FM OSC Coil) L3 (FM DET Coil) L4 (FM DET Coil) L1 (FM ANT Coil)	Adjust for maximum output.
13	〃	106 MHz (〃)	106 MHz (150.3mm (5 29/32"))	〃	CT4 (FM OSC Trimmer) CT2 (FM DET Trimmer) CT3 (FM DET Trimmer) CT1 (FM ANT Trimmer)	Adjust for maximum output. Repeat steps (12) and (13).
	MUTING LEVEL ALIGNMENT					
	Note : Muting switch .....ON					
14	Connect to FM antenna terminal through FM dummy antenna.	98 MHz (100% Mod. with 400 Hz) Output 28 dB	98 MHz	Output meter or speaker across speaker terminals.	VR145	Adjust so that output can be obtained.
	FM-MONO DISTORTION ALIGNMENT					
	Note : Muting switch ..... OFF					
15	Connect to FM antenna terminal through FM dummy antenna.	98 MHz (100% Mod. with 400 Hz) Output 60 dB	98 MHz	Connect distortion meter to speaker terminals.	T104 (FM 7th IFT) (P)	Adjust for minimum distortion.

Notes :

Stereo-modulator ..... Connect stereo-modulator output to EXT. MOD. terminal of signal generator. Internal OSC 1 kHz. Pilot signal modulation 10%.

Signal generator..... Frequency approximately 98 MHz. Output level 60 dB. Moduration mode FM.

1. Band selector ..... FM-Auto
2. Bass and treble control ..... Center
3. High filter switch.....OFF
4. Mode switch ..... Stereo
5. Maintain line voltage at 120 volts.
6. Muting switch ..... OFF
7. Loudness switch ..... OFF
8. Speaker switch ..... Main
9. Tape monitor switch .....Source
10. Dummy load .....8Ω, L and R Main terminal

19 kHz, 38 kHz COIL AND PHASE ALIGNMENT

	SIGNAL GENERATOR CONNECTION	STEREO MODULATOR MODE and MOD. RATE	INDICATOR (VTVM or SCOPE)	ADJUSTMENT	REMARKS
16	FM antenna terminal thru. dummy antenna.	———	Connect scope to **TP**302, Common to chassis.	T301 (19 kHz Coil)	Adjust for maximum output.
17	〃	———	Connect scope to **TP**301, Common to chassis.	T302 (38 kHz Coil)	〃
18	〃	L (or R) 100%	Connect scope to speaker terminals.	T301 (19 kHz Coil)	Adjust for minimum right (or left) output.
	SEPARATION ALIGNMENT				
19	FM antenna terminal thru. dummy antenna.	L (and R) 30%	Output meter across speaker terminals through low pass filter. (Refer to fig. 6)	VR306	Adjust for minimum right (and left) output.
	LEAK CARRIER AND 19 kHz TRAP ALIGNMENT				
20	FM antenna terminal thru. dummy antenna.	100% Mod. with 1 kHz.	Connect VTVM to speaker terminals.	Volume control of set.	Adjust for 0 dB (3 V range) output.
21	〃	0% Modulation	〃	VR309	Adjust for minimum leak carrier.
22	〃	〃	〃	T303 (19 kHz Trap) T304 (19 kHz Trap) Right	Adjust for minimum output. (left and right side)

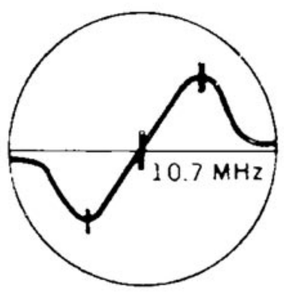

Fig. 4

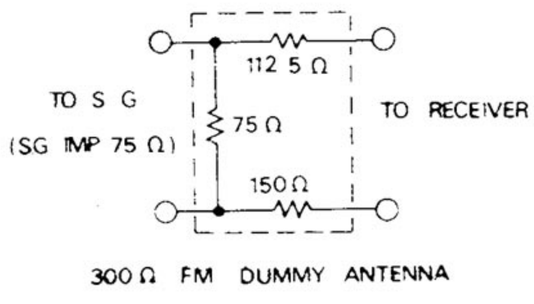

Fig. 5

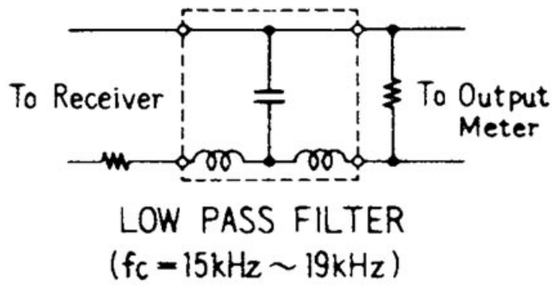

Fig. 6

www.hifiengine.com

Schematic Diagram MODEL SA-5800

(This schematic diagram may be modified with development of technology.)

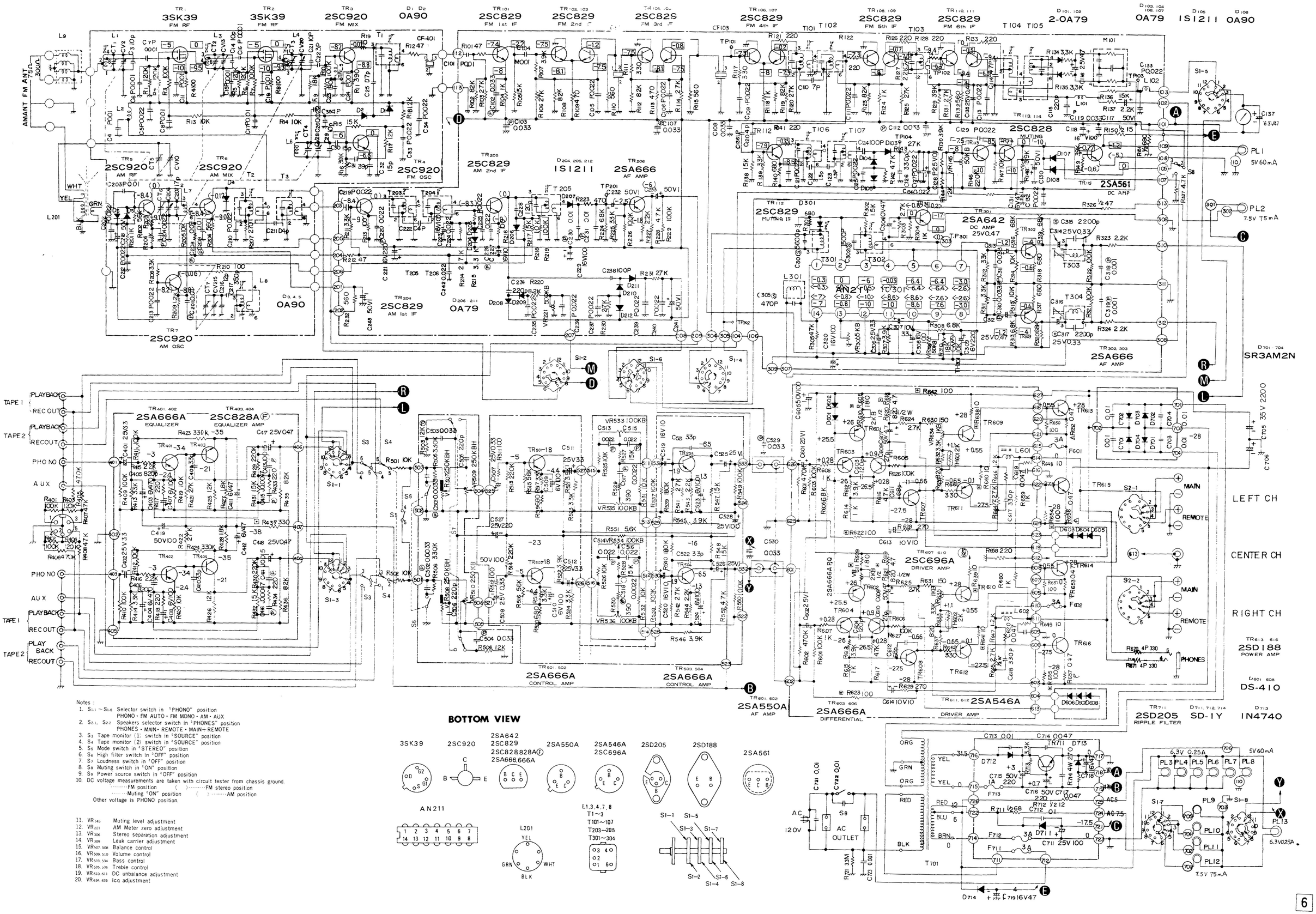

Notes :

1. S_{1-1} ~ S_{1-8} Selector switch in "PHONO" position
   PHONO · FM AUTO · FM MONO · AM · AUX
2. S_{2-1}, S_{2-2} Speakers selector switch in "PHONES" position
   PHONES · MAIN · REMOTE · MAIN+REMOTE
3. S_3 Tape monitor (1) switch in "SOURCE" position
4. S_4 Tape monitor (2) switch in "SOURCE" position
5. S_5 Mode switch in "STEREO" position
6. S_6 High filter switch in "OFF" position
7. S_7 Loudness switch in "OFF" position
8. S_8 Muting switch in "ON" position
9. S_9 Power source switch in "OFF" position
10. DC voltage measurements are taken with circuit tester from chassis ground.
    ·····FM position ( )·····FM stereo position
    ·····Muting "ON" position ( )·····AM position
    Other voltage is PHONO position.
11. VR_{145} Muting level adjustment
12. VR_{221} AM Meter zero adjustment
13. VR_{306} Stereo separation adjustment
14. VR_{309} Leak carrier adjustment
15. $VR_{507, 508}$ Balance control
16. $VR_{509, 510}$ Volume control
17. $VR_{533, 534}$ Bass control
18. $VR_{535, 536}$ Treble control
19. $VR_{612, 613}$ DC unbalance adjustment
20. $VR_{634, 635}$ Icq adjustment

AM, FM, FM-MPX, Control & Equalizer Circuit Board MODEL SA-5800

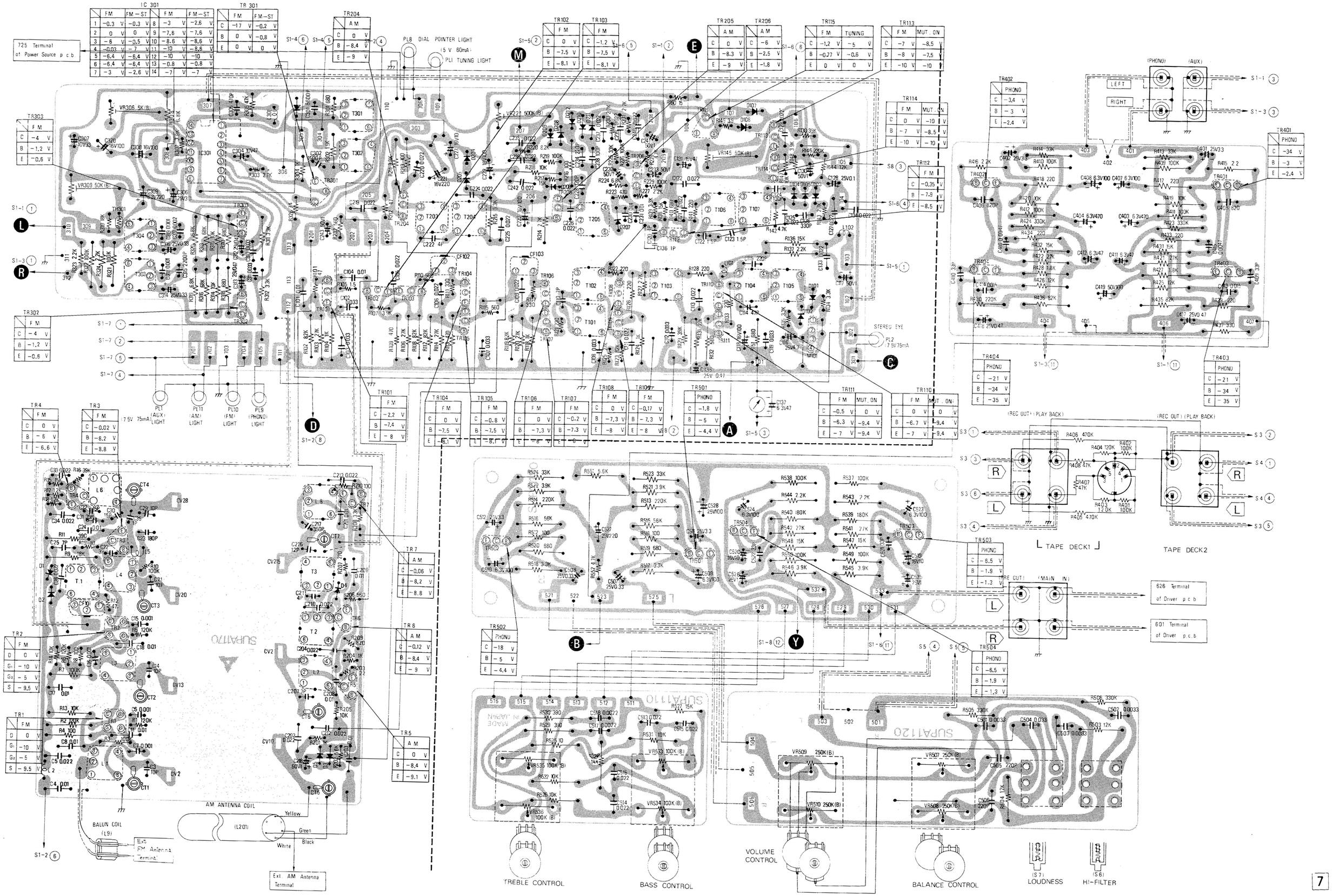

■ LOCATION OF CONTROLS

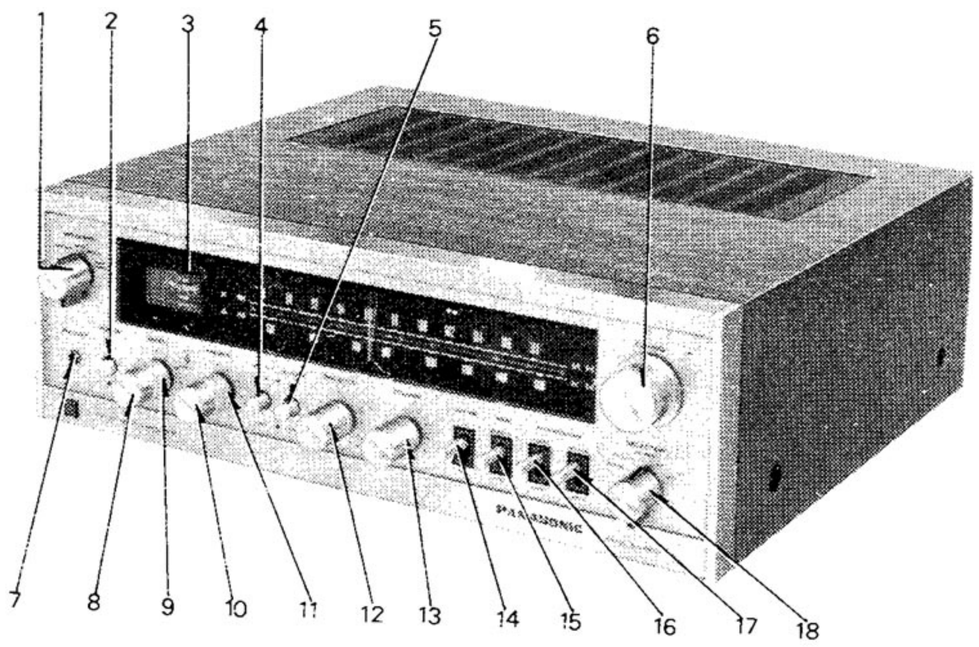

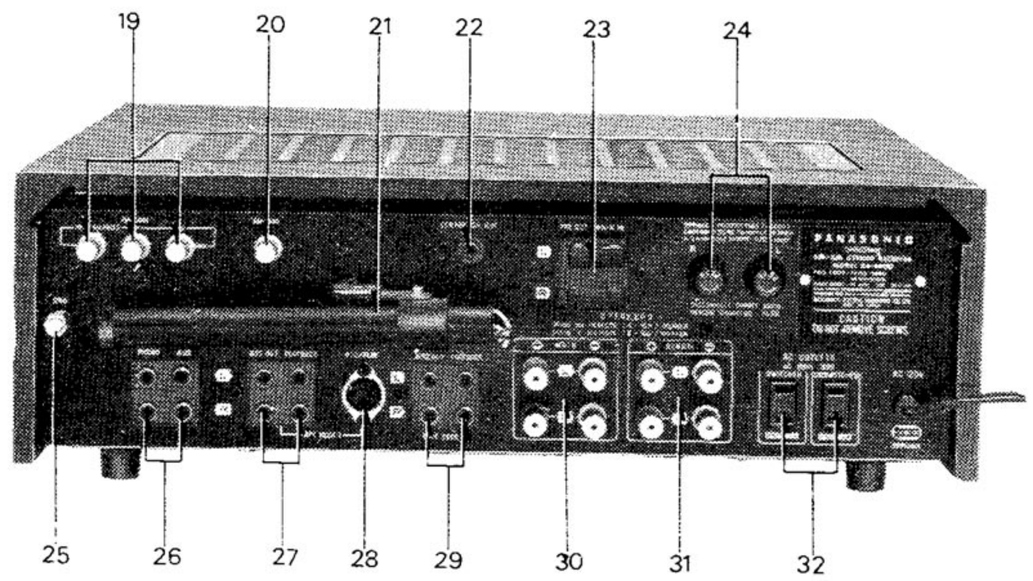

1. SPEAKERS SELECTOR SWITCH
2. POWER SOURCE SWITCH
3. METER
4. HIGH FILTER SWITCH
5. LOUDNESS SWITCH
6. TUNING CONTROL
7. HEAD PHONES
8. BASS CONTROL (LEFT)
9. BASS CONTROL (RIGHT)
10. TREBLE CONTROL (LEFT)
11. TREBLE CONTROL (RIGHT)
12. BALANCE CONTROL
13. VOLUME CONTROL
14. MUTING SWITCH
15. MODE SWITCH
16. TAPE MONITOR (1) SWITCH
17. TAPE MONITOR (2) SWITCH
18. SELECTOR SWITCH
19. FM ANTENNA TERMINALS
20. AM ANTENNA TERMINAL
21. AM FERRITE CORE ANTENNA
22. CENTER CHANNEL OUTPUT TERMINAL
23. PRE-MAIN AMP CONNECTOR TERMINALS
24. SPEAKER PROTECTION FUSES
25. GROUND TERMINAL
26. INPUT TERMINALS
27. TAPE MONITOR (1) TERMINALS
28. TAPE MONITOR (1) DIN SOCKET
29. TAPE MONITOR (2) TERMINALS
30. MAIN SPEAKER TERMINALS
31. REMOTE SPEAKER TERMINALS
32. AC OUTLETS

■ TO REMOVE CABINET AND FRONT PANEL

1. Remove four (4) cabinet-mounting screws, nos. ① ~ ④, as illustrated in figure. (XSB4+16BVCS) ×4
2. Remove cabinet from chassis.
3. Remove six (6) red bottom board-mounting screws from set bottom view. (XTV3D8CR) × 6
4. Remove bottom board from chassis.
5. To remove front panel, nine (9) control knobs from front view should be first removed.
6. Remove eight (8) panel-mounting screws, nos. ⑤ ~ ⑫, as illustrated in figure. (XTV3D8CK) ×8

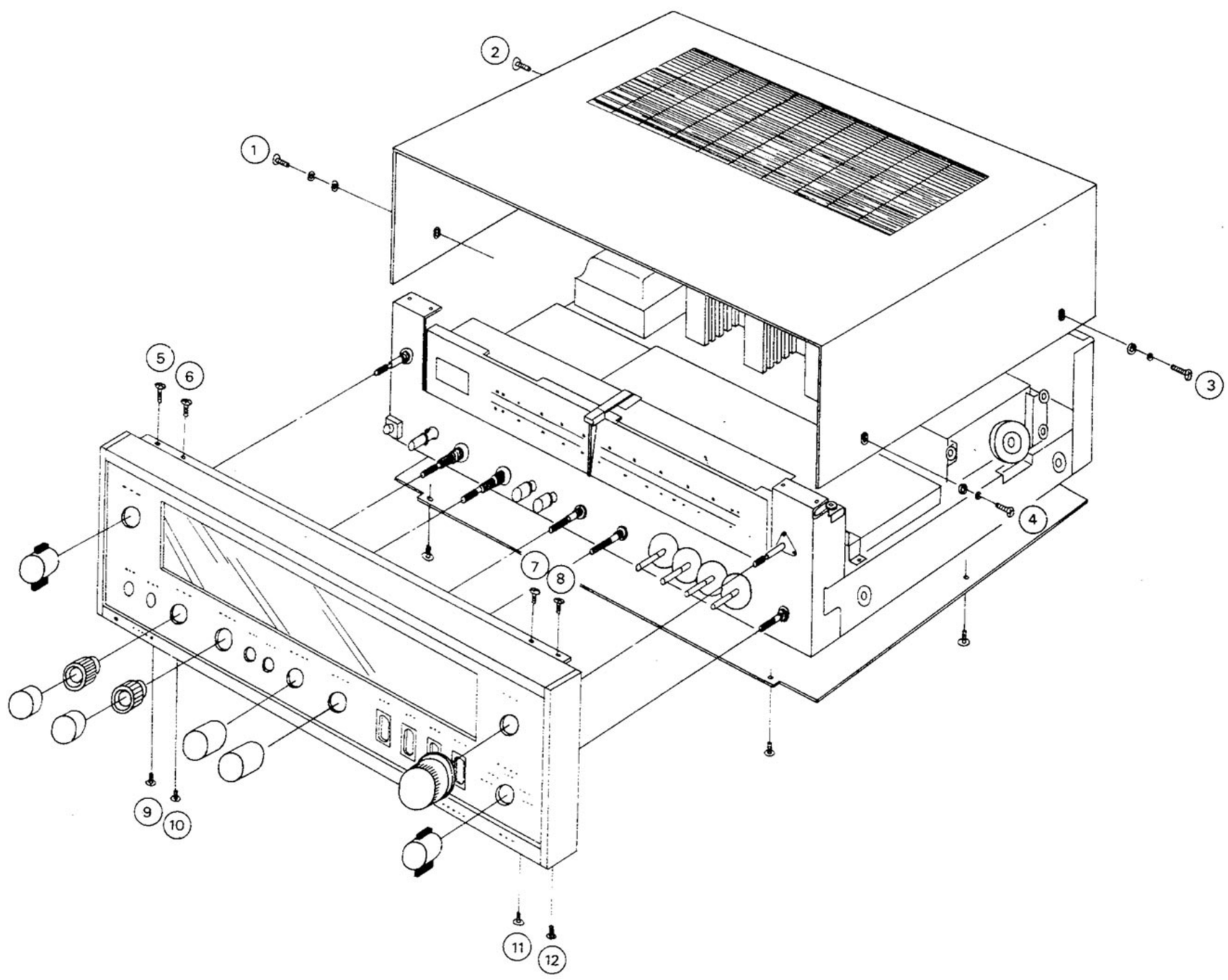

www.hifiengine.com

Rfe. No.	Part No.	Description	Per Set (Pcs.)	Remarks
R15, 138, 217	ERD14VJ153	15Kohm 1/4W. ± 5%. Carbon	3	B
R125	ERD14VJ273	27Kohm. 1/4W. ± 5%. Carbon	1	B
R225	ERD14VJ333	33Kohm. 1/4W. ± 5%. Carbon	1	B
R16, 130	ERD14VJ393	39Kohm. 1/4W. ± 5%. Carbon	2	B
R305	ERD14VJ473	47Kohm. 1/4W. ± 5%. Carbon	1	B
R123	ERD14VJ823	82Kohm. 1/4W. ± 5%. Carbon	1	B
R3, 10, 219, 226, 229	ERD14VJ104	100Kohm. 1/4W. ± 5%. Carbon	5	B
R1, 5, 6	ERD14VJ124	120Kohm. 1/4W. ± 5%. Carbon	3	B
R144	ERD14VJ123	12Kohm. 1/4W. ± 5%. Carbon	1	B
R310	ERD14VJ183	18Kohm. 1/4W. ± 5%. Carbon	1	B
R146	ERD14VJ224	220Kohm. 1/4W. ± 5%. Carbon	1	B
R618, 619	ERD14FJ4R7	4.7ohm. 1/4W. ± 5%. Carbon	2	B
R638, 639, 640, 641	ERD14FJ100	10ohm. 1/4W. ± 5%. Carbon	4	B
R622, 623, 642, 650, 651, 654, 655	ERD14FJ101	100ohm. 1/4W. ± 5%. Carbon	7	B
R608, 609	ERD14FJ181	180ohm. 1/4W. ± 5%. Carbon	2	B
R437	ERD14FJ331	330ohm. 1/4W. ± 5%. Carbon	1	B
R409, 410, 411, 412	ERD14TSJ104	100Kohm. 1/4W. ± 5%. Carbon	4	Ⓝ B
R539, 540	ERD14TSJ184	180Kohm. 1/4W. ± 5%. Carbon	2	Ⓝ B
R513, 514	ERD14TSJ224	220Kohm. 1/4W. ± 5%. Carbon	2	Ⓝ B
R423, 424, 505, 506	ERD14TSJ334	330Kohm. 1/4W. ± 5%. Carbon	4	Ⓝ B
R150	ERD12TJ150	15ohm. 1/2W. ± 5%. Carbon	1	B
R712	ERD12TJ120	12ohm. 1/2W. ± 5%. Carbon	1	B
R151	ERD12TJ681	680ohm. 1/2W. ± 5%. Carbon	1	B
R711	ERD12TJ680	68ohm. 1/2W. ± 5%. Carbon	1	B
R326	ERD12TJ820	82ohm. 1/2W. ± 5%. Carbon	1	B
R620, 621	ERD12TJ821	820ohm. 1/2W. ± 5%. Carbon	2	B
R624, 625, 644, 645	ERD12TJ272	2.7Kohm. 1/2W. ± 5%. Carbon	4	B
R721	ERC12GK335	3.3Mohm. 1/2W. ± 10%. Solid	1	C
R648, 649	ERU2P100	10ohm. 2W. ± 10%. Fuse Resistor	2	B
R652, 653, 656, 657	ERU2PR47	0.47ohm. 2W. ± 10%. Fuse Resistor	4	Ⓝ B
R714	ERM4P271	270ohm. 4W. ± 10%. Wire	1	C
R670, 671	ERM4P331	330ohm. 4W. ± 10%. Wire	2	C

VARIABLE RESISTORS

VR634, 635	EVLS3AA00B13	ICQ Adjustment 1Kohm (B)	2	A
VR610, 611	EVLS3AA00B23	DC Unbalance Adjustment 2Kohm (B)	2	A
VR306	EVLS3AA00B53	Separation Adjustment 5Kohm (B)	1	A
VR145, 309	EVLS3AA00B54	Muting Level, Leak Carrier Adjustment 50kohm (B)	2	A
VR221	EVLS3AA00B55	AM Meter "zero" Adjustment 500Kohm(B)	1	A
VR509, 510	EVGN7AL30BF5	Volume Control 250Kohm (B)	1	A
VR507, 508	EVFN0AL30252	Balance Control 250Kohm(BH)	1	A
VR533, 534, 535, 536	EVF34AN01B15	Bass, Treble Control 100Kohm (B)	2	A

CAPACITORS

C6, 7, 15, 16	ECKD05102P	0.001mfd. 50WV. $^{+100}_{-0}$ %. Ceramic	4	C
C4, 8, 11, 17, 18, 24, 101, 203,	ECKE05103P	0.001mfd. 50WV. $^{+100}_{-0}$ %. Ceramic	8	C
C5, 26, 33, 34, 105, 106, 109, 111, 113, 121, 125, 127, 129, 132, 133, 134, 202, 210, 212, 213, 219, 224, 225, 235, 236, 237, 239, 240, 242	ECKE05223P	0.022mfd. 50WV. $^{+100}_{-0}$ %. Ceramic	29	C
C104	ECKE05103MY	0.01mfd. 50WV. ±20%. Ceramic	1	C
C714, 717	ECKD05473Z	0.047mfd. 50WV. $^{+80}_{-20}$ %. Ceramic	2	Ⓝ C
C617, 618	ECKD5331KF	330mmf. 500WV. ±10 %. Ceramic	2	C
C405, 406	ECKD5821K	820mmf. 500WV. ± 10%. Ceramic	2	C
C701, 702, 703, 704, 713	ECKD5103P	0.01mfd. 500WV. $^{+100}_{-0}$ %. Ceramic	5	C
C35, 136	ECCD05010CC	1mmf. 50WV. ±0.25mmf. Ceramic	2	C
C122, 123	ECCD051R5CC	1.5mmf. 50WV. ±0.25mmf. Ceramic	2	C
C22	ECCD05030CC	3mmf. 50WV. ±0.25mmf. Ceramic	1	C
C120, 211, 222	ECCD05040CC	4mmf. 50WV. ±0.25mmf. Ceramic	3	C
C25, 110, 207	ECCD05070DC	7mmf. 50WV. ±0.5 mmf. Ceramic	3	C
C3, 14, 21	ECCD05100KC	10mmf. 50WV. ±10%. Ceramic	3	C
C216	ECCD05120KC	12mmf. 50WV. ±10%. Ceramic	1	C
C30, 32	ECCD05150KC	15mmf. 50WV. ±10%. Ceramic	2	C
C409, 410, 521, 522	ECCD05330KC	33mmf. 50WV. ±10%. Ceramic	4	C
C31	ECCD05390KC	39mmf. 50WV. ±10%. Ceramic	1	C
C29	ECCD05100KU	10mmf. 50WV. ±10%. Ceramic	1	C
C114	ECCD05470KU	47mmf. 50WV. ±10%. Ceramic	1	C
C124, 238	ECCD05101K	100mmf. 50WV. ±10%. Ceramic	2	C
C228	ECCD05121K	120mmf. 50WV. ±10%. Ceramic	1	C

Ref. No.	Part No.	Description	Per Set (Pcs.)	Remarks
C23	ECCD05181K	180mmf. 50WV. ±10%. Ceramic	1	C
C115, 234, 505, 506	ECCD05221K	220mmf. 50WV. ±10%. Ceramic	4	C
C126	ECCD05331K	330mmf. 50WV. ±10%. Ceramic	1	C
C609, 610	ECCD5270K	27mmf. 500WV. ±10%. Ceramic	2	Ⓝ C
C611, 612	ECCD5680K	68mmf. 500WV. ±10%. Ceramic	2	Ⓝ C
C603, 604	ECCD5121K	120mmf. 500WV. ±10%. Ceramic	2	Ⓝ C
C318, 319	ECQG05102JZN	0.001mfd. 50WV. ± 5%. Polyester	2	C
C415, 416	ECQG05472JZN	0.0047mfd. 50WV. ± 5%. Polyester	2	C
C517, 518	ECQG05222KZN	0.0022mfd. 50WV. ±10%. Polyester	2	C
C501, 502	ECQG05332KZN	0.0033mfd. 50WV. ±10%. Polyester	2	C
C413, 414	ECQG05153JZN	0.015mfd. 50WV. ± 5%. Polyester	2	C
C310, 311	ECQG05333JZN	0.033mfd. 50WV. ± 5%. Polyester	2	C
C208, 209, 230 231, 201	ECQG05103KZN	0.01mfd. 50WV. ±10%. Polyester	5	C
C204, 220, 226, 513, 514, 515, 516	ECQG05223KZN	0.022mfd. 50WV. ±10%. Polyester	7	C
C102, 103, 107, 108, 112, 119, 503, 504, 529, 530	ECQG05333KZN	0.033mfd. 50WV. ±10%. Polyester	10	C
C619, 620	ECQM1473M	0.047mfd. 125WV. ±20%. Polyester	2	C
C217	ECQS1351JZ	350mmf. 125WV. ± 5%. Styrol	1	C
C305	ECQS1471JZ	470mmf. 125WV. ± 5%. Styrol	1	C
C302	ECQS1152KZ	1500mmf. 125WV. ±10%. Styrol	1	C
C301	ECQS1562KZ	5600mmf. 125WV. ±10%. Styrol	1	Ⓝ C
C315, 317	ECQS1222JZ	2200mmf. 125WV. ± 5%. Styrol	2	Ⓝ C
C128	ECAG25ER1	0.1mfd. 25WV. Electrolytic	1	B
C314, 316, 507, 508	ECAG25ER33	0.33mfd. 25WV. Electrolytic	4	B
C312, 313, 417, 418, 135	ECAG25ER47	0.47mfd. 25WV. Electrolytic	5	B
C525, 526	ECSZ25EF1	1mfd. 25WV. Electrolytic	2	B
C401, 402	ECSZ25EF3R3	3.3mfd. 25WV. Electrolytic	2	B
C309	ECEA6V220	220mfd. 6.3WV. Electrolytic	1	B
C137, 411, 412	ECEA6V47	47mfd. 6.3WV. Electrolytic	3	B
C407, 408, 509, 510, 523, 524	ECEA6V100	100mfd. 6.3WV. Electrolytic	6	B
C403, 404	ECEA6V470	470mfd. 6.3WV. Electrolytic	2	B
C613, 614	ECEA10V10	10mfd. 10WV. Electrolytic	2	B
C307	ECEA10V33	33mfd. 10WV. Electrolytic	1	B
C304	ECEA10V47	47mfd. 10WV. Electrolytic	1	B
C719	ECEA10V220	220mfd. 10WV. Electrolytic	1	B
C227, 519, 520	ECEA16V10	10mfd. 16WV. Electrolytic	3	B
C131, 718	ECEA16V47	47mfd. 16WV. Electrolytic	2	B
C118, 229, 223, 308, 320	ECEA16V100	100mfd. 16WV. Electrolytic	5	B
C221	ECEA16V220	220mfd. 16WV. Electrolytic	1	B
C306	ECEA25V3R3	3.3mfd. 25WV. Electrolytic	1	B
C116	ECEA25V4R7	4.7mfd. 25WV. Electrolytic	1	B
C528, 711	ECEA25V100	100mfd. 25WV. Electrolytic	2	B
C527	ECEA25V220	220mfd. 25WV. Electrolytic	1	B
C117, 130, 218, 232, 233, 241, 243	ECEA50V1	1mfd. 50WV. Electrolytic	7	B
C607, 608	ECEA50V47	47mfd. 50WV. Electrolytic	2	B
C419, 605	ECEA50V100	100mfd. 50WV. Electrolytic	2	B
C715, 716	ECEA50V220	220mfd. 50WV. Electrolytic	2	B
C705, 706	ECEM35R222Z	2200mfd. 35WV. Electrolytic	2	B
C511, 512	ECAG25ER68	0.68mfd. 25WV. Electrolytic	2	B
C601, 602	ECAG25E1	1mfd. 25WV. Electrolytic	2	B
C723	ECNU4A102M	0.001mfd. 400WV. ±20%. Paper	1	C
C722	ECNU4A103M	0.01mfd. 400WV. ±20%. Paper	1	C
C721	ECNU8A103M	0.01mfd. 800WV. ±20%. Paper	1	C
C712	ECHS1104M	0.1mfd. 125WV. ±20%. Paper	1	C

VARIABLE CAPACITORS

CV2, 10, 13, 20, 28, 206, 215	ECV7PN34P12G	Tuning Gang FM/AM	1	A
CT2, 3	ECV1ZW10P50	Trimmer	2	A
CT1, 5, 4	ECV1ZW10P12	Trimmer	3	A
CT6, 7	ECV1ZW20P12	Trimmer	2	A

THERMISTORS and COMPONENT COMBINATION

TH301	RRT103	Thermistor, 10Kohm	1	A
TH601, 602	RRTA202-2	Thermistor, 2Kohm	2	A
M101	EXA5DL04C	Couplate, FM Discriminator	1	A

SWITCHES

S1-1 S1-8	ESRC4A5L30AS	Selector Switch	1	Ⓝ B
S2-1, S2-2	ESRC224L30BS	Speakers Selector Switch	1	B
S3, S4	SSLA8S	Tape Monitor 1, 2 Switch	2	A
S5, S8	SSLA3S	Mode, Muting Switch	2	A
S6, S7	SSHA13S	High Filter, Loudness Switch	2	Ⓝ A

www.hifiengine.com

Ref. No.	Part No.	Description	Per Set (Pcs.)	Remarks
S S9	SSHA16S	Power Source Switch	1	A
		LIGHTS and FUSES		
PL1, 8	XAMR18K260	Light, Tuning Eye, Pointer (5V 60mA)	2	A
PL2, 9~12	XAM37T150	Light, Stereo Eye, PHONO, FM, AM, AUX Indicator (7.5V 75mA)	5	A
PL3,~7, 13	XAM35T	Light, Dial & Meter (6.3V 0.25A)	6	A
F601, 602	XBAS1A3001	Fuse, SP. Protection (3A)	2	Ⓝ A
F711, 712	XBAS1B3003	Fuse, Power Source (3A)	2	A
F713	XBAS1B1001	Fuse, Power Source (1A)	1	A
		CABINETS		
CA1	SBNA49	Knob, Selector, Speakers	2	A
CA2	SBNA56	Knob, Power, Hi-Filter, Loudness	3	A
CA3	SBNA50	Knob, Bass Treble (Outside)	2	A
CA4	SKAA380	Cabinet, (Complete)	1	Ⓝ B
CA5	SBNA47	Knob, Tuning Control	1	A
CA6	SGBA35	Badge	1	C
CA7	SBNA48	Knob, Bass Treble (Inside)	2	A
CA8	SBNA46	Knob, Balance Volume	2	A
CA9	SGWA460	Smoke Plate	1	B
CA10	SBNA51S	Knob, Tape Monitor, Muting, Mode	4	A
CA11	SYEA17	Panel (Complete)	1	Ⓝ C
CA12	SMAA10-1S	Antenna Terminal, FM/AM	4	C
	SMXA31	Spacer, Antenna Terminal (Gray)	4	C
CA13	RHR111	Bushing, AM Antenna Coil Lead	1	C
CA14	RJF3109	Terminal, Center Channel Output	1	C
CA15	SJFA3405	Terminal, Pre-Main Amp. Connector	1	C
CA16	SJPA9201	Short Pin	2	B
CA17	SJFA107	Holder, Fuse	2	Ⓝ C
CA18	SGTA790	Name Plate	1	Ⓝ C
CA19	SNEA404	Nut, Ground Terminal	1	C
CA20	SHRA202	Leg	4	C
CA21	SJFA3406	Terminal, Input, Tape Monitor	3	C
CA22	SKUA200S	Bottom Board	1	Ⓝ C
CA23	RJS31-1	DIN Socket	1	B
CA24	SMXA31-1	Spacer, Speaker Terminals (Red)	4	C
CA25	SJTA802	Nut, Speaker Terminals	8	C
	SJTA801S	Velt, Speaker Terminals	8	C
CA26	SMXA31	Spacer, Speaker Terminals (Gray)	4	C
CA27	SGPA40B	Rear Panel	1	Ⓝ C
CA28	SJSA9203	Socket, AC Outlet	2	C
CA29	RHR111	Bushing, AC Cord	1	C
CA30	RJA34	AC Cord	1	C
	XSB4+16BVCS	Screw, Cabinet M'tg.	4	B
	XTV3D8CR	Red Screw, Bottom Board M'tg	6	C

Ref. No.	Part No.	Description	Per Set (Pcs.)	Remarks
		CHASSIS		
CH1	SSMA13	Meter	1	Ⓝ A
CH2	SDPA5013	Pointer, Dial	1	Ⓝ B
CH3	SKDA211	Dial Scale	1	Ⓝ B
CH4	RJV201	Socket, Dial Light	6	C
CH5	RDR20	Pulley, Dial Cord	7	C
CH6	RDZ05-5	Cord, Dial (160cm)	63 1/8"	B
CH7	SJJA8	Headphones	1	B
CH8	SDTA8331	Shaft, Tuning	1	A
CH9	SDXA216	Bearing, Tuning Shaft	1	B
CH10	SDXA912	Bearing, Tuning Shaft	1	B
CH11	SDDA35S	Drum, Dial	1	B
	RDS4090A	Spring, Dial Cord	2	A
	XXAR3H6S	Screw, Drum M'tg.	2	C
	XTV3D8CK	Screw, Panel M'tg.	8	C
		ACCESSORIES		
A1	SSAA1	Cord, FM Antenna	1	A
A2	RJP5	Pin Plug	4	A
A3	XBAS1A3001	Fuse, SP. Protection (3A)	4	Ⓝ A
		PACKINGS		
P1	SPPA16-1	Soft Cover	1	C
	SPH77	Cover, AC Cord	1	C
P2	SPHA6003	Polyethylene Sheet	1	C
P3	SPNA148	Inside Carton (Upper)	1	C
P4	SPNA170	Inside Carton (Lower)	1	Ⓝ C
P5	SPNA6010	Carton Box	1	Ⓝ C
P6	SOFA78	Printed Matter	1	Ⓝ B

■ PACKING PARTS LOCATION

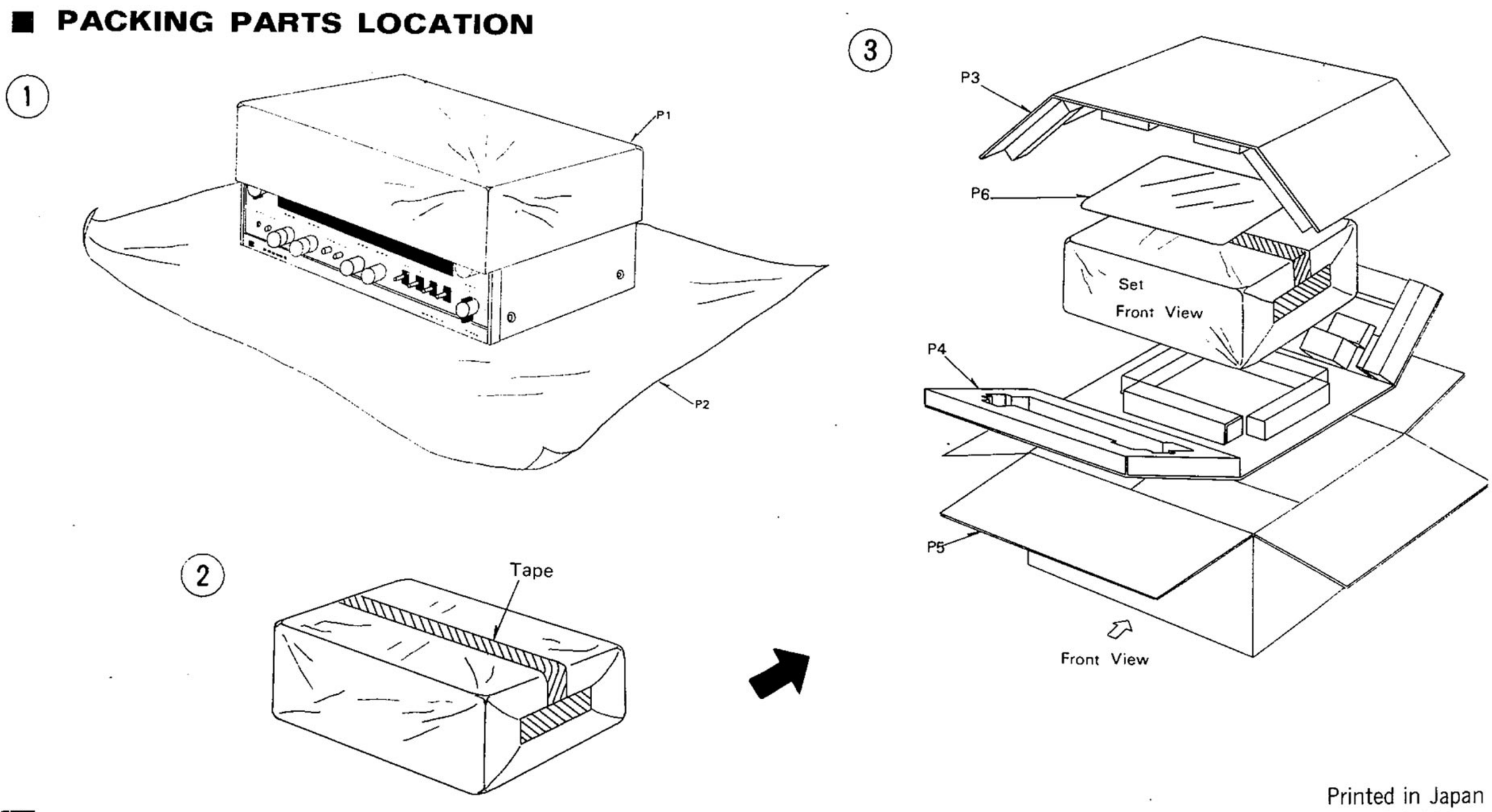

Printed in Japan
K-7108-3,100

www.hifiengine.com

Panasonic Service Division

NATIONAL HEADQUARTERS: 10-16 44th DRIVE, LONG ISLAND CITY, N.Y. 11101/(212) 973-570

FILE THIS BULLETIN WITH YOUR SERVICE MANUAL.

PANASONIC SERVICENTER
TECHNICAL SERVICE BULLETIN
STEREO 72-4
JANUARY, 1972

MODEL: SA-5800

PRODUCT: AM/FM STEREO RECEIVER

SUBJECT: CORRECTION TO SERVICE MANUAL.

There is an error in the A.M. alignment instruction on page 4, item 3 of the Service manual.

Correct instruction is given below.

	SIGNAL GENERATOR or SWEEP GENERATOR		RCVR.DIAL SETTING -	INDICATOR	ADJUSTMENT	REMARKS
	CONNECTION	FREQUENCY	DISTANCE	(VTVM or SCOPE)		
	AM ALIGNMENT					
3.	———	———	———	Signal meter of set	VR221 ⬆	Adjust for "O" signal meter indication

Panasonic *REGIONAL / DISTRICT SERVICE HEADQUARTERS*

NORTHEAST DISTRICT
10-16 44th Dr.,
L.I.C., N.Y. 11101

N.Y. METRO DISTRICT
10-30 44th Dr.,
L.I.C., N.Y. 11101

MIDWEST REGION
371 N. 3rd Ave.,
Des Plaines, Ill. 60016

WESTERN REGION
2121 Yates Ave.,
City of Commerce, Cal. 90040

SOUTH CENTRAL REGION
4415 Simonton Rd.,
Dallas, Tex. 75240

SOUTH EAST
2 Meca Way
Duluth, Ga.

DIST: 1-11,13,15,17,19.

www.hifiengine.com