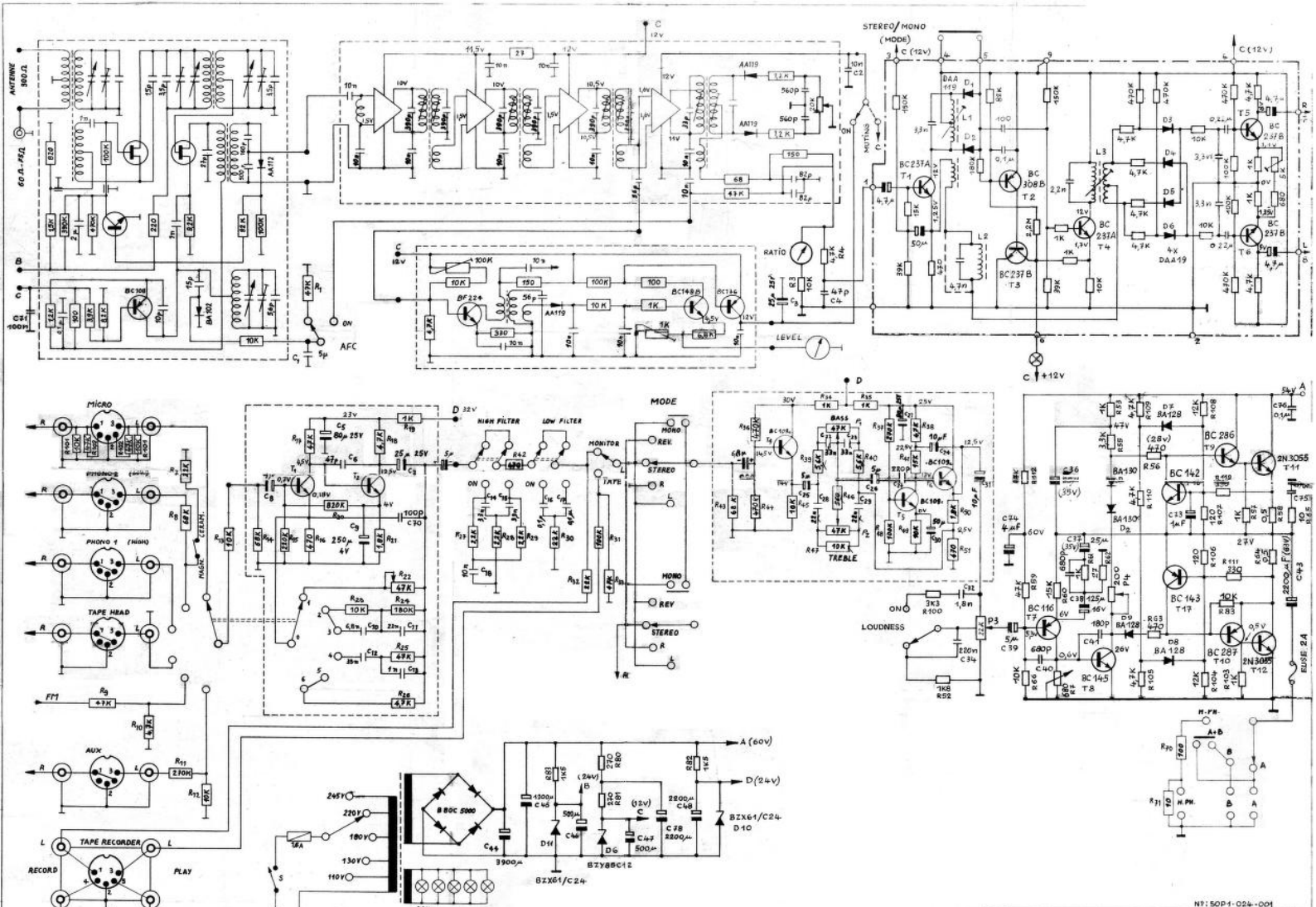
ANTENNE 300 Ω
60 Ω-FM
AFC
STEREO/MONO (MODE)
MUTING
RATIO
LEVEL
MICRO
PHONO 2 (LOW)
PHONO 1 (HIGH)
TAPE HEAD
FM
AUX
TAPE RECORDER
RECORD
PLAY
HIGH FILTER
LOW FILTER
MONITOR
TAPE
MODE
MONO
REV
STEREO
TREBLE
LOUDNESS
NET
H-FM
H.PH.
EUSE 2A
N°: 50P1-024-001
ALL SILICON FET RECEIVER TYPE: 2001
2x35 WATT TPAS 74
1974
— CARAD — KUURNE - BELGIUM

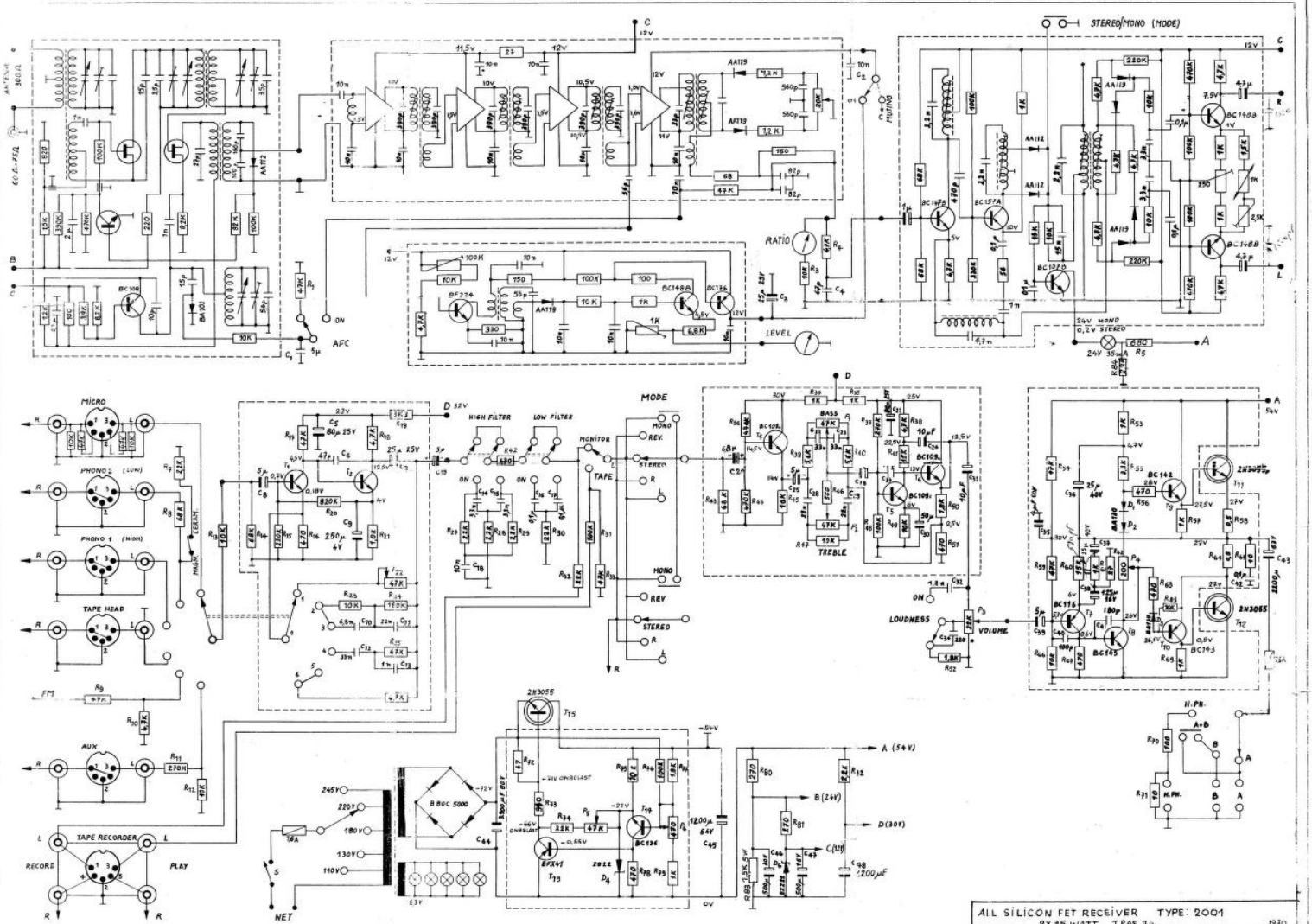
STEREO/MONO (MODE)
MICRO
PHONO 2 (LOW)
PHONO 1 (HIGH)
TAPE HEAD
AUX
TAPE RECORDER
RECORD
PLAY
HIGH FILTER
LOW FILTER
MONITOR
TAPE
MODE
MONO
REV.
STEREO
BASS
TREBLE
LOUDNESS
VOLUME
RATIO
LEVEL
AFC
ON
MUTING
24V MONO
0,2V STEREO
NET
245V
220V
180V
130V
110V
B 80C 5000
2N3055
BC136
BFX41
H.PN.
K.PN.
ALL SILICON FET RECEIVER TYPE: 2001
2x 35 WATT TPAS 74
1970
N.V. G.L. CARPENTIER N.V. KUURNE - BELGIUM

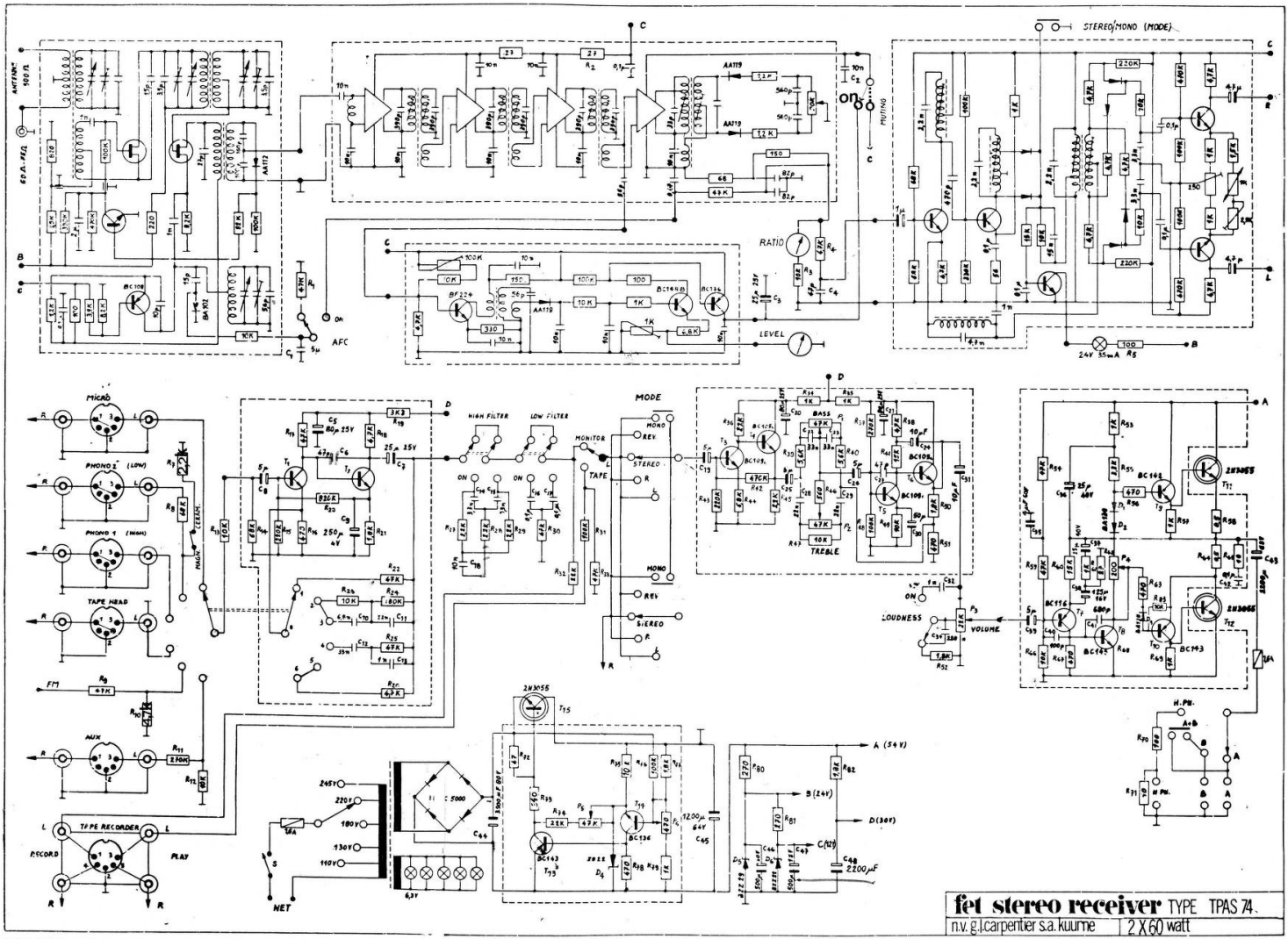

fet stereo receiver TYPE TPAS 74.

n.v. g.j. carpentier s.a. kuurne | 2 X 60 watt