PROTON 1100 SERVICE MANUAL

STEREO PREAMPLIFIER

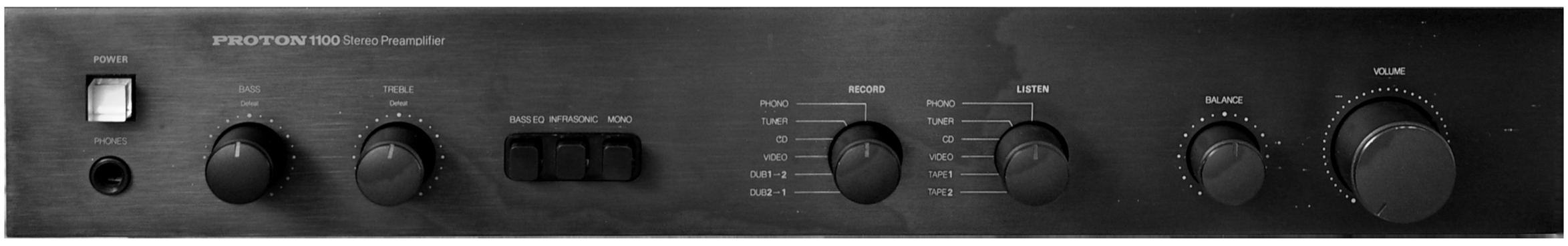

CONTENTS

SPECIFICATIONS..... 1
ALIGMNENT..... 2
BLOCK DIAGRAM..... 3
CIRCUIT DIAGRAM..... 4
PCB PARTS LOCATION (TOP VIEW/BOTTOM)..... 5
WIRING DIAGRAM..... 9
ELECTRICAL PARTS LIST..... 10
MECHANICAL PARTS LSIT..... 11
ASSEMBLY DIAGRAM..... 11
HANDLE ASSEMBLY DIAGRAM..... 12
PACKING DIAGRAM..... 13

SPECIFICATIONS

Maximum Output Level (20Hz-20kHz) at THD 0.1%	
PRE Out:	18V
Hi-Level PRE-Out:	18V
T.H.D. 20Hz-20kHz 2 Volt Output:	0.003%
I.M.D. 2 Volt Output:	0.003%
Frequency Response 20-20kHz:	±0.2dB
High level Input Rsistance/Capacitance:	30K OHM/150pF
Line Input Sensitivity (Video):	150mV
(Tape Play):	150mV
(Phono MM):	2.5mV
(Phono MC High/Low):	0.2mV/0.1mV
Residual Noise (Flat):	0.02mV
Channel Crosstalk (1kHz):	90db
Function Crosstalk (1kHz):	84dB
S/N Ratio (A-Weighted) (Video):	105dB
(Tape Play):	105dB
(Phono MM):	94dB
(Phono MC):	79dB
Bass Control @ 100Hz (Boost/cut):	+10dB/-10dB
Treble Control @ 10kHz (Boost/cut):	+10dB/-10dB
Bass EQ @ 75 Hz:	+3dB
Infrasonic Filter (20Hz):	-3dB
(Slope):	-12dB/oct
Phono Input Resistance (MM/MC):	47k OHM/100 OHM
Phono Input Capacitance (Selectable):	100pF/200pF/320pF
Phono Overload @ 1kHz T.H.D. 0.1% (MM):	290mV
Phono T.H.D. at 4.5V Output (MM):	0.006%
(MC):	0.01%
RIAA Response Accuracy MM/MC:	±0.2dB/±0.3dB
Dimensions W x H x D (inch):	16-1/2" x 2-1/2" x 13"
(cm):	42.0 x 6.5 x 33.0 cm
Net Weight:	4.4kg/9.65 Lbs
POWER SUPPLY	
U.S.A. and Canadian Models	120V/60Hz
European Model	220V/50Hz
British and Australian Models	240V/50Hz
Other Area Model (General Model)	115V,230V/50Hz,60Hz

ALIGNMENT

A. MM DC OFF-SET ALIGNMENT:

1. Push on power for 5 minutes PRE-heating.
2. Connect a DC millvolt-METER to T1 (L-CH) and T2 (R-CH) the meter sensitivity should be set at 3V full scale deflection.
3. Adjust VR401 (R-CH) and VR402 (L-CH) and meter sensitivity till the meter reading zero.

B. SENSITIVITY ADJSUT:

1. Set signal generator level at 150mV.
   Connect to tuner input terminals.
2. Connect a AC-METER to PRE out terminals, the meter sensitivity should be set at 3V full scale deflection.
3. Adjust VR501 (R-CH) and VR502 (L-CH) till the meter reading to 1V output.

BLOCK DIAGRAM

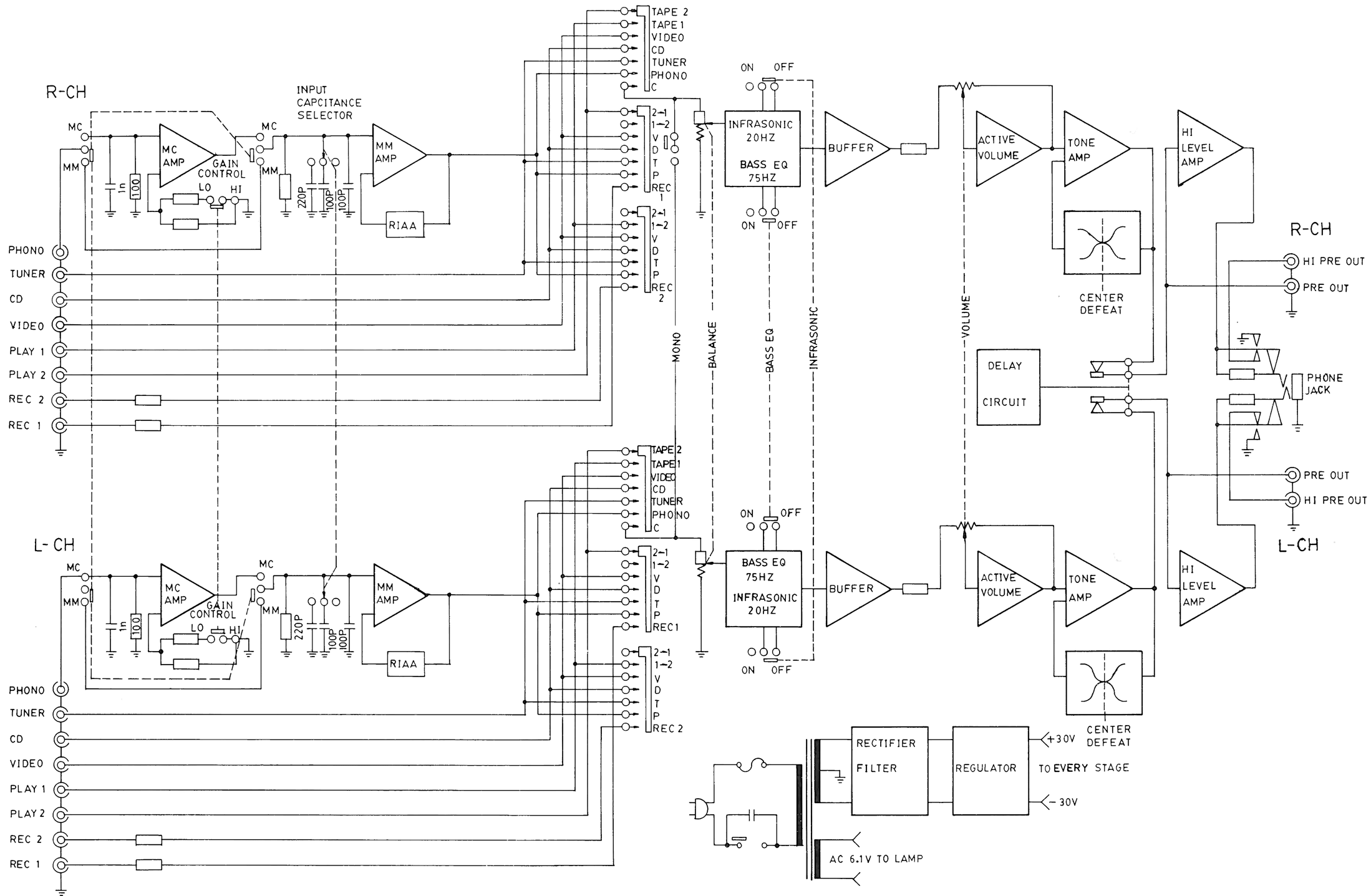

CIRCUIT DIAGRAM

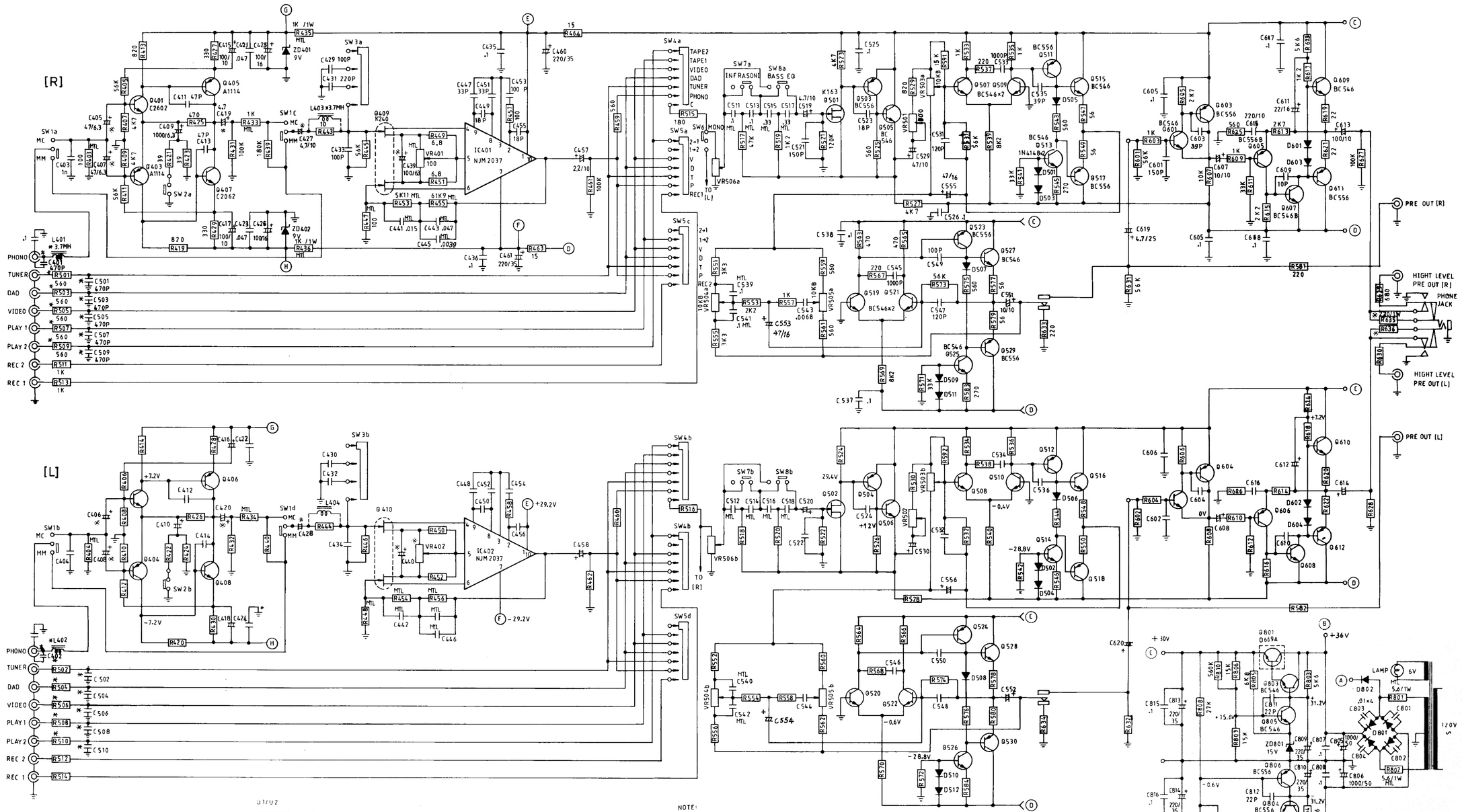

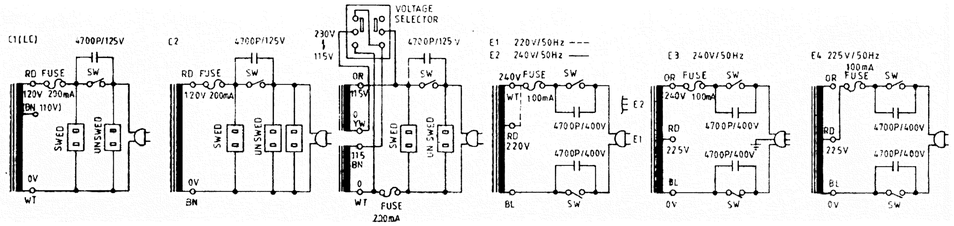

NOTE:

SW1 MC/MM SELECTOR (MM)
SW2 MC HI/LO SELECTOR (LO)
SW3 MM INPUT CAPACITANCE SELECTOR(100P)
SW4 INPUT SOURCE SELECTOR (TAPE2)
SW5 RECORD SOURCE SELECTOR
SW6 MONO/STEREO SELECTOR (STEREO)
SW7 INFRASONIC (OFF)
SW8 BASS EQ(OFF)
VR503 VOLUME CONTROL
VR504 BASS CONTROL
VR505 TREBLE CONTROL
VR506 BLANCE CONTROL
VR401 MM OFFSET VOLTAGE ADJ
VR501 SENS ADJ

HEAT SINK

1 ※ SPECIAL CAPCITANCE FOR AUDIO
2 ※ E5 ONLY
3 ALL RESISTOR ARE 1/4W 5% CARBON UNLESS OTHERWISE SPECIFIED.
4 ALL CAPCITANCE ARE IN μF UNLESS OTHERWISE SPECIFIED.

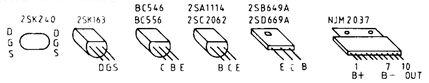

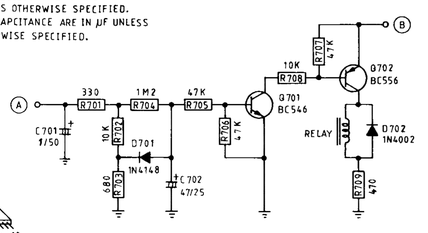

CAUTION- Each precaution to be followed during servicing.

CRITICAL COMPONENT WARNING
These CRITICAL COMPONENTS that are shaded on the schematic diagram are used to prevent electric shock and fire hazard. All these special components must be replaced only with the same type identical to these in the schematic diagram.

CAUTION- Make leakage current measurement before returning the appliance to the customer. See measurement circuit as shown below.

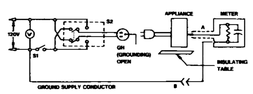

PCB PARTS LOCATION (TOP VIEW)

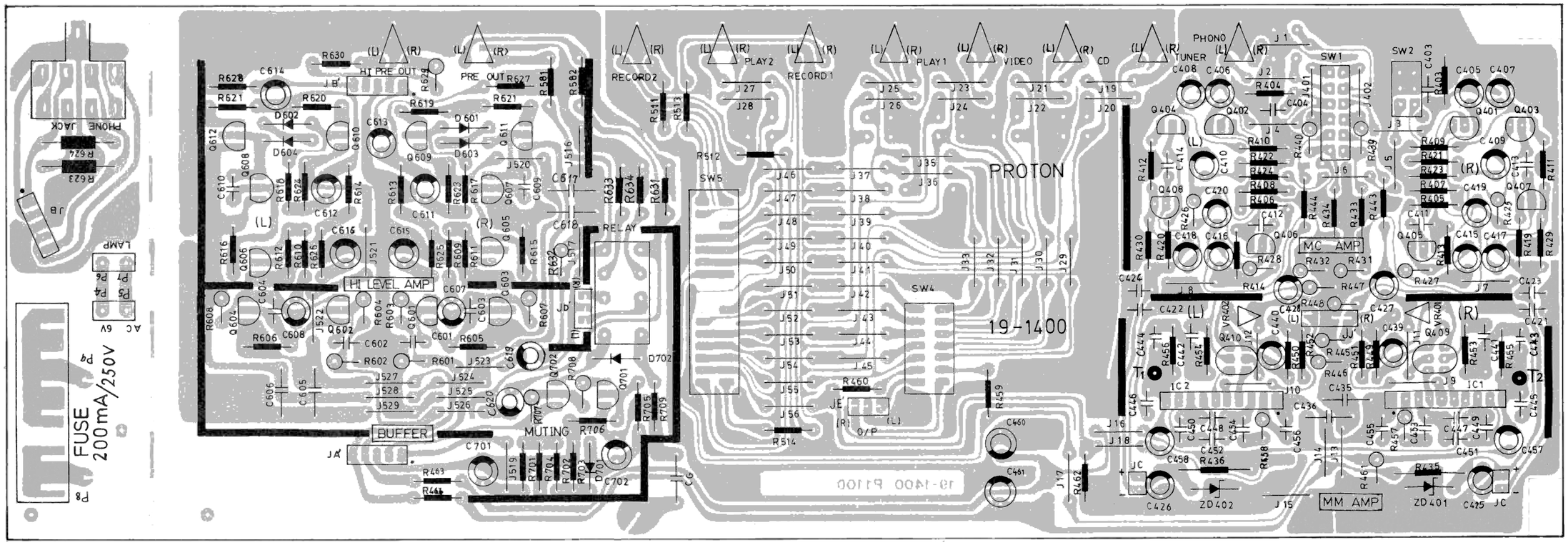

PCB PARTS LOCATION (BOTTOM VIEW)

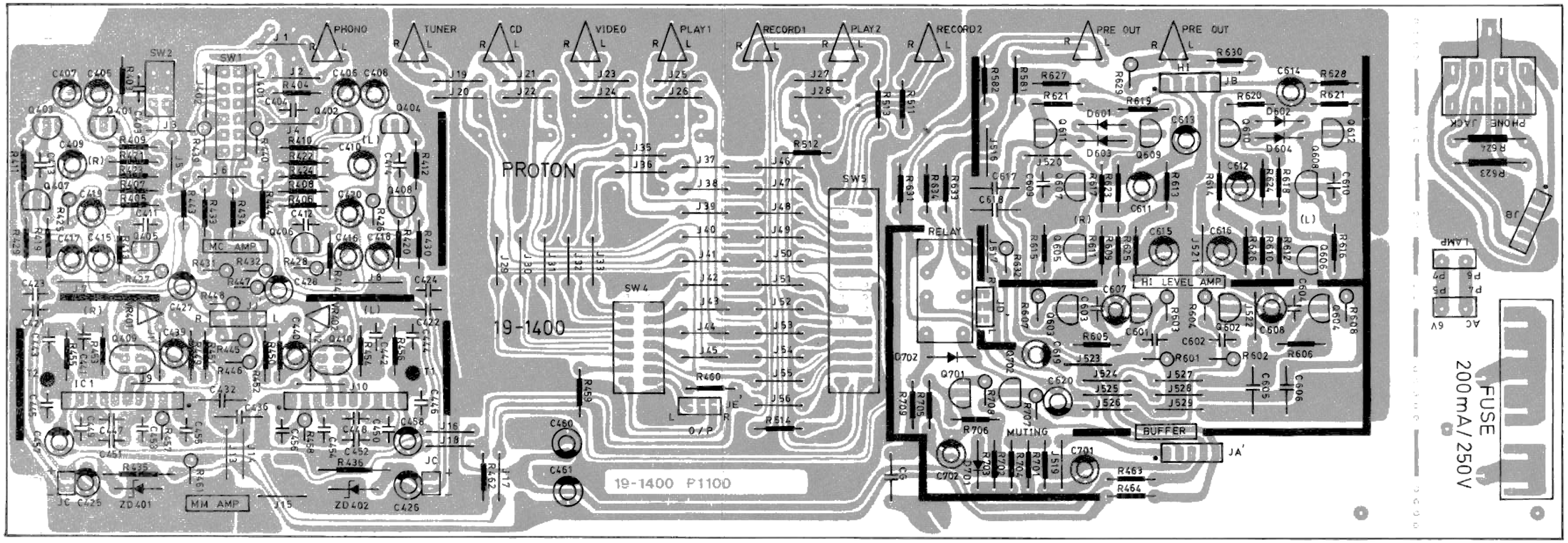

PCB PARTS LOCATION (TOP VIEW)

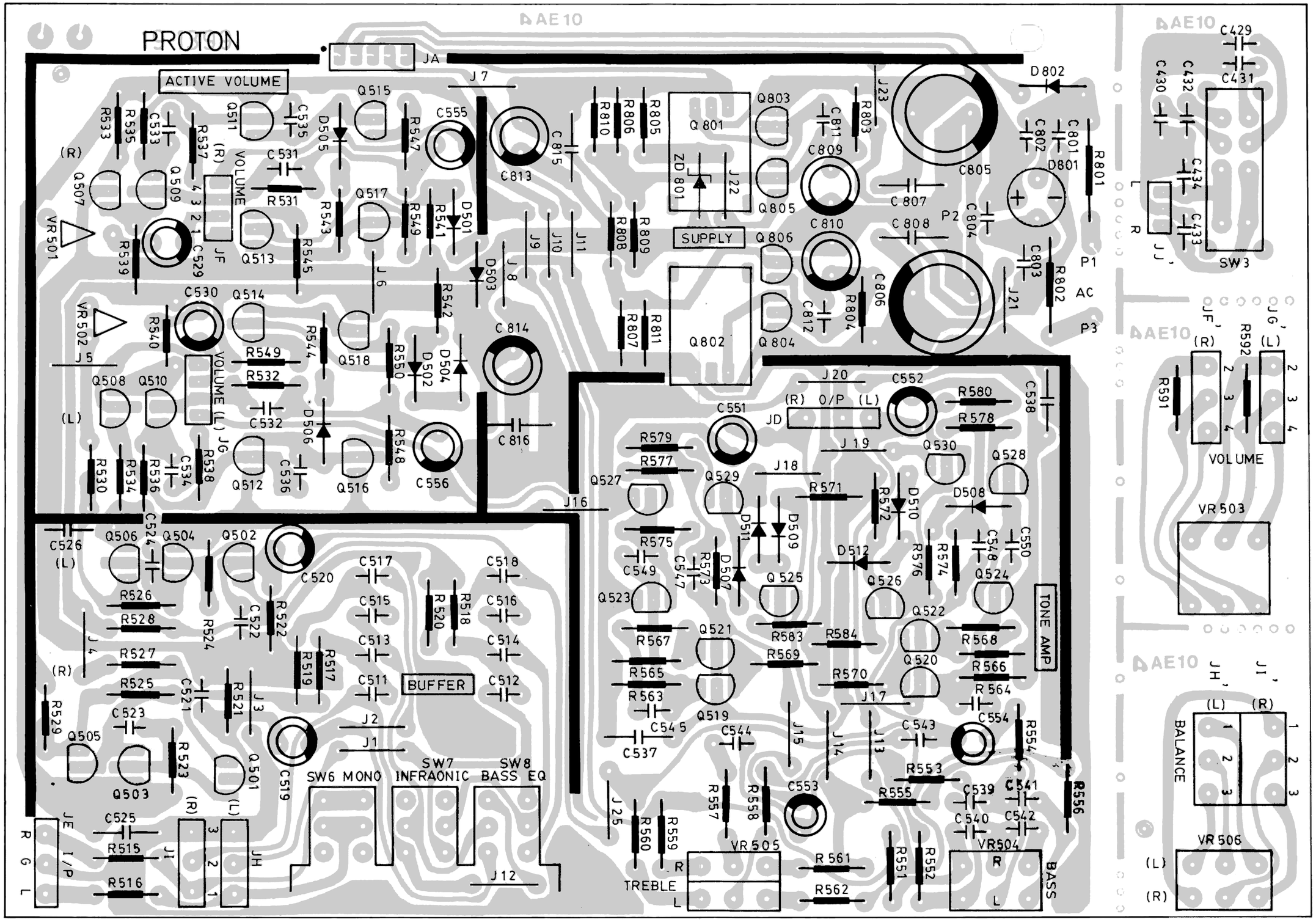

PCB PARTS LOCATION (BOTTOM VIEW)

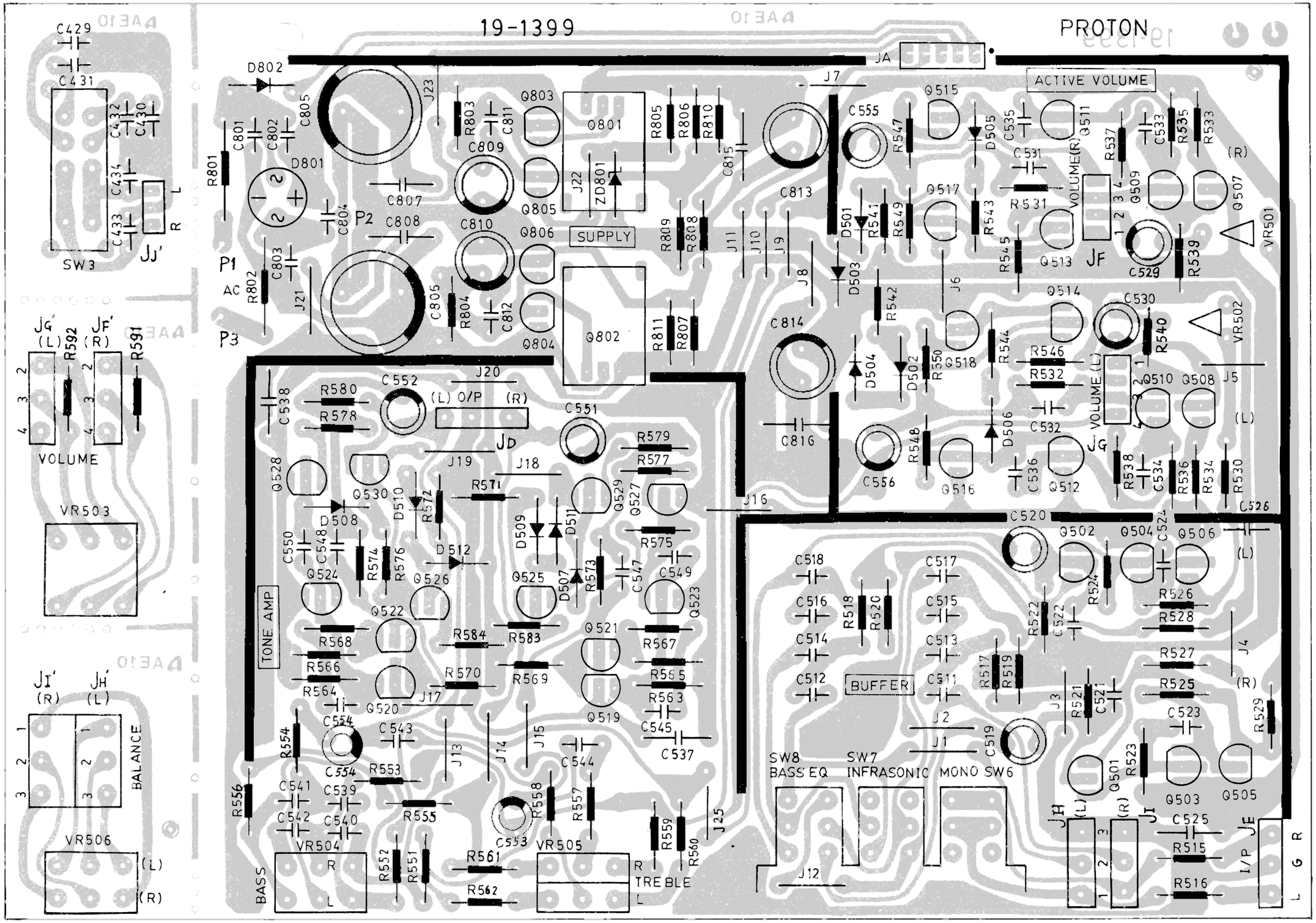

WIRING DIAGRAM

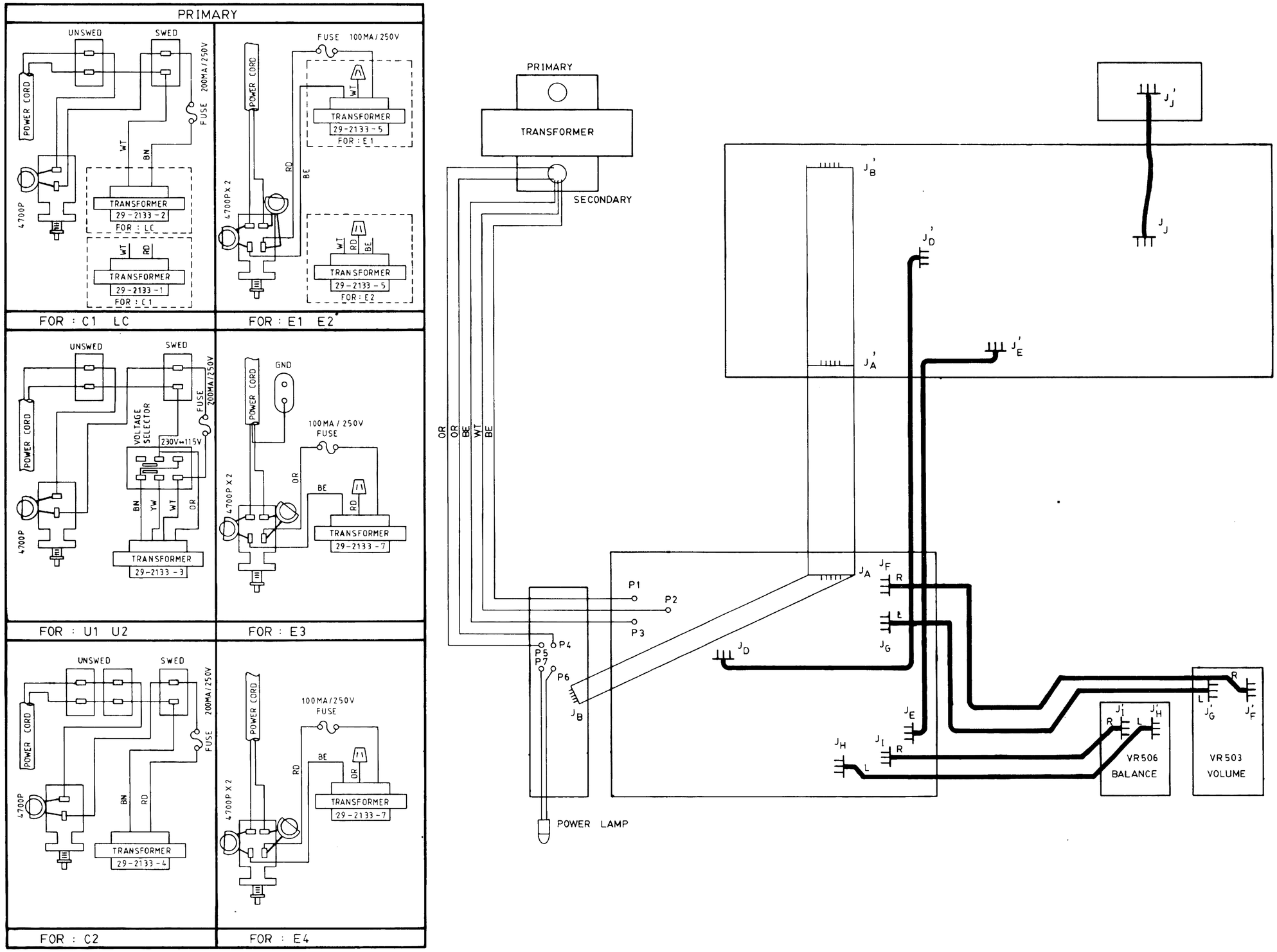

ELECTRICAL PARTS LIST

REF. NO.	PART NO.	DESCRIPTION
RESISTORS		
(All are carbon film 1/4W +-5% unless noted otherwise)		
R403-R404	16-1/4CA101J	100 OHM
R405-R406	16-1/4CA563J	56K OHM
R407-R410	16-1/4CA472J	4K7 OHM
R411-R412	16-1/4CA563J	56K OHM
R413-R414	16-114CA821J	820 OHM
R419-R420	16-1/4CA821J	820 OHM
R421-R424	16-1/4CA390J	39 OHM
R425-R426	16-1/4CR471J	470 OHM
R427-R428	16-1/4CR331J	330 OHM
R429-R430	16-1/4CA331J	330 OHM
R431-R432	16-1/4CR104J	100K OHM
R433-R434	16-1/4MP102J	1K OHM MTL
⚠ R435-R436	16-1AS102J	1K OHM 1W MO
R439-R440	16-1/4CA184J	180K OHM
R443-R444	16-1/4CA100J	10 OHM MTL
R445-R446	16-1/4CR563J	56K OHM
R447-R448	16-1/4MP101J	100 OHM MTL
R449-R452	16-1/4CA6R8J	6.8 OHM
R453-R454	16-1/4MP5101J	5K1 OHM MTL
455-R456	16-1/4MP6192J	61K9 OHM MTL
R457-R458	16-1/4CR101J	100 OHM
R459-R460	16-1/4CA561J	560 OHM
R461	16-1/4CR103J	100K OHM
R462	16-1/4CA103J	100K OHM
* R501-R510	16-1/4CA561J	560 OHM
R511-R514	16-1/4CA102J	1K OHM
R515-R516	16-1/4CA181J	180 OHM
R517-R518	16-1/4CA473J	47K OHM
R519-R520	16-1/4CA122J	1K2 OHM
R521-R522	16-1/4CA124J	120K OHM
R523-R524	16-1/4CA472J	4K7 OHM
R525-R526	16-1/4CA561J	560 OHM
R527-R528	16-1/4CA472J	4K7 OHM
R529-R530	16-1/4CA821J	820 OHM
R531-R532	16-1/4CA563J	56K OHM
R533-R536	16-1/4CA102J	1K OHM
R537-R538	16-1/4CA221J	220 OHM
R539-R540	16-1/4CA822J	8K2 OHM
R541-R542	16-1/4CA333J	33K OHM
R543-R544	16-1/4CA561J	560 OHM
R545-R546	16-1/4CA271J	270 OHM
⚠ R547-R550	16-1/4AS560J	56 OHM MO
R551-R552	16-1/4CA332J	3K3 OHM
R553-R554	16-1/4CA222J	2K2 OHM
R555-R556	16-1/4CA332J	3K3 OHM
R557-R558	16-1/4CA102J	1K OHM
R559-R562	16-1/4CA561J	560 OHM
R563-R566	16-1/4CA471J	470 OHM
R567-R568	16-1/4CA221J	220 OHM
R569-R570	16-1/4CA822J	8K2 OHM
R571-R572	16-1/4CA333J	33K OHM
R573-R574	16-1/4CA563J	56K OHM
R575-R576	16-1/4CA561J	560 OHM
⚠ R577-R580	16-1/4AS560J	56 OHM MO
R583-R584	16-1/4CA271J	270 OHM
R591-R592	16-1/4CA153J	15K OHM
R601-R602	16-1/4CR563J	56K OHM
R603-R604	16-1/4CR102J	1K OHM
R605-R606	16-1/4CA272J	2K7 OHM
R607-R608	16-1/4CR103J	10K OHM
R609-R610	16-1/4CA102J	1K OHM

The components identified by mark * are for E5 area only.
The R443-R444 have to be replaced by L403-L404 on E5 area.

REF. NO.	PART NO.	DESCRIPTION
RESISTORS (All are carbon film 1/4W +-5% vnless noted otherwise)		
R611-R612	16-1/4CA333J	33K OHM
R613-R614	16-1/4CA272J	2K7 OHM
R615-R616	16-1/4CA222J	2K2 OHM
R617-R618	16-1/4CA122J	1K2 OHM
⚠ R619- R622	16-1/4AS220J	22 OHM MO
R623-R624	16-1/4CA562J	5K6 OHM
R625-R626	16-1/4CA561J	560 OHM
R627-R626	16-1/4CA103J	100K OHM
R629	16-1/4CR681J	680 OHM
R630	16-1/4CA681J	680 OHM
R631	16-1/4CA563J	56K OHM
R632	16-1/4CR563J	56K OHM
R633-R634	16-1/4CA221J	220 OHM
⚠ R635-R636	16-1AS221J	220 OHM 1W MO
R701	16-1/4CA331J	330 OHM
R702	16-1/4CA103J	10K OHM
R703	16-1/4CA681J	680 OHM
R704	16-1/4CA125J	1M2 OHM
R705-R706	16-1/4CA473J	47K OHM
R707	16-1/4CR473J	47K OHM
R708	16-1/4CR103J	10K OHM
R709	16-1/4CA471J	470 OHM
⚠ R801-R802	16-1AS5R6J	5.6 OHM 1W MO
R803-R804	16-1/4CA562J	5K6 OHM
R805	16-1/4CA682J	6K8 OHM
R806-R809	16-1/4CA153J	15K OHM
R810,R807	16-1/4CA564J	560K OHM
R808,R811	16-1/4CA273J	27K OHM

NOTE: 1.The components identified by shading and mark ⚠ are critical for safety.
Replace only with part number specified.
2.The components identified by mark "MTL" means the material is metal.

CAPACITORS				
* C401-C402	17-5DR471J	ceramic	470P	50V +-5%
C403-C404	17-5DR102K	CERAMIC	1000pF	50V +-10%
C405-C408	17-2065	ELECTROLYTIC	47uF	6.3V +50-10%
C409-C410	17-2063	ELECTROLYTIC	1000uF	6.3V +50-20%
C411-C414	17-5DR470JSL	CERAMIC	47pF	50V +-5%
C415-C418	17-1ER107Y	ELECTROLYTIC	100uF	10V +50-10%
C419-C420	17-2066	ELECTROLYTIC	4.7uF	6.3V +50-10%
C421-C424	17-5DR473Z	CERAMIC	0.047uF	50V +80-20%
C425-C426	17-1ER107Y	ELECTROLYTIC	100uF	10V +50-10%
C427-C428	17-2066	ELECTROLYTIC	4.7uF	6.3V +50-10%
C429-C430	17-5DR101JSL	CERAMIC	100pF	50V +-5%
C431-C432	17-5DR221K	CERAMIC	220pF	50V +-10%
C433-C434	17-5DR101JSL	CERAMIC	100pF	50V +-5%
C435-C436	17-5DH104J	CERAMIC	0.1uF	50V +80-20%
C439-C440	17-2064	ELECTROLYTIC	100uF	6.3V +50-20%
C441-C442	17-5HR103J	METAL	0.015uF	50V +-5%
C443-C444	17-5HR473J	METAL	0.047uF	50V +-5%
C445-C446	17-5HR392J	METAL	0.0039uF	50V +-5%
C447-C448	17-5DR330M	CERAMIC	33pF	50V +-20%
C449-C450	17-5DR180KSL	CERAMIC	18pF	50V +-10%
C451-C452	17-5DR330M	CERAMIC	33pF	50V +-20%
C453-C454	17-5DR101JSL	CERAMIC	100pF	50V +-5%
C455-C456	17-5DR180KSL	CERAMIC	18pF	50V +-10%
C457-C458	17-2.5ER225Y	ELECTROLYTIC	2.2uF	25V +50-10%
C460-C461	17-3.5ER227Y	ELECTROLYTIC	220uF	35V +50-10%
* C501-C510	17-5DR471J	CERAMIC	470pF	50V +-5%
C511-C514	17-5HR104J	METAL	0.1uF	50V +-5%
C515-C518	17-5HR334J	METAL	0.33uF	50V +-5%
C519-C520	17-2.5ER475Y	ELECTROLYTIC	4.7uF	25V +50-10%
C521-C522	17-5DR151K	CERAMIC	150pF	50V +-10%

The components identified by mark * are for E5 area only.
The R443-R444 have to be replaced by L403-L404 on E5 area.

REF. NO.	PART NO.	DESCRIPTION		
C523-C524	17-5DR180KSL	CERAMIC	18pF	50V +-10%
C525-C526	17-5DH104Z	CERAMIC	0.1uF	50V +80-20%
C529-C530	17-1ER476Y	ELECTRÓLYTIC	47uF	10V +50-10%
C531-C532	17-5DR121K	CERAMIC	120pF	50V +-10%
C533-C534	17-5DR102K	CERAMIC	1000pF	50V +-10%
C535-C536	17-5DR390M	CERAMIC	39pF	50V +-20%
C537-C538	17-5DH104Z	CERAMIC	0.1uF	50V +80-20%
C539-C542	17-5HR104J	METAL	0.1uF	50V +-5%
C543-C544	17-5FR682J	METAL	0.0068	50V +-5%
C545-C546	17-5DR102K	CERAMIC	1000pF	50V +-10%
C547-C548	17-5DR121K	CERAMIC	120pF	50V +-10%
C549-C550	17-5DR101J	CERAMIC	100pF	50V +-5%
C551-C552	17-1.6ER106Y	ELECTROLYTIC	10uF	16V +50-20%
C553-C556	17-1ER476Y	ELECTROLYTIC	47uF	10V +50-10%
C601-C602	17-5DR151K	CERAMIC	150pF	50V +-10%
C603-C604	17-5DR390M	CERAMIC	39pF	50V +-20%
C605-C606	17-5DH104Z	CERAMIC	0.1uF	50V +80-20%
C607-C608	17-1.6ER106Y	ELECTROLYTIC	10uF	16V +50-10%
C609-C610	17-5DR100DSL	CERAMIC	10pF	50V +-0.5pF
C611-C612	17-1.6ER226Y	ELECTROLYTIC	22uF	16V +50-10%
C613-C614	17-1ER107Y	ELECTROLYTIC	100uF	10V +50-10%
C701	17-5ER105Y	ELECTROLYTIC	1uF	50V +50-10%
C702	17-2.5ER476Y	ELECTROLYTIC	47uF	25V +50-10%
C801-C804	17-5DR103M	CERAMIC	0.01uF	50V +-20%
C805-C806	17-5DR102K	ELECTROLYTIC	1000uF	50V +-10%
C807-C808	17-5DH104Z	CERAMIC	0.1uF	50V +80-20%
C809-C810	17-3.5ER227Y	ELECTROLYTIC	220uF	35V +50-10%
C811-C812	17-5DR220JSL	CERAMIC	22pF	50V +-5%
C813-C814	17-3.5ER227Y	ELECTROLYTIC	220uF	35V +50-10%
C815-C816	17-5DH104Z	CERAMIC	0.1uF	50V +80-20%
DIODE				
D501-D512	30-1152TA	DIODE IN4148		
D601-D604	30-1152TA	DIODE IN4148		
D701	30-1152TA	DIODE IN4148		
D702,D802	30-1002	DIODE IN4002		
D801	30-1040	BRIDGE DIODE		
ZD401-D402	30-1063	DIODE ZENER RD9.1EB3		
ZD801	30-1044-1	DIODE AENER HZ15.2		
TRANSISTOR				
Q401-Q402	30-2349	2SC2602		
Q403-Q406	30-2375	2SA1114		
Q407-Q408	30-2349	2SC2602		
Q409-Q410	30-2402	2SK240		
Q501-Q502	30-2264	2SK163		
Q503-Q504	30-2096-TR	BC556B		
Q505-Q510	30-2090-TR	BC546B		
Q511-Q512	30-2096-TR	BC556B		
Q513-Q516	30-2090-TR	BC546B		
Q517-Q518	30-2096-TR	BC556B		
Q519-Q522	30-2090-TR	BC546B		
Q523-Q524	30-2096-TR	BC556B		
Q525-Q528	30-2090-TR	BC546B		
Q529-Q530	30-2096-TR	BC556B		
Q601-Q602	30-2090-TR	BC546B		
Q603-Q606	30-2096-TR	BC556B		
Q607-Q610	30-2090-TR	BC546B		
Q611-Q612	30-2096-TR	BC556B		
Q701	30-2090-TR	BC546B		
Q702	30-2096-TR	BC556B		
Q801	30-2260-TR	2SD669A		
Q802	30-2259-TR	2SB649A		
Q803,Q805	30-2090-TR	BC546B		

The components identified by mark * are for E5 area only.
The R443-R444 have to be replaced by L403-L404 on E5 area.

REF. NO.	PART NO.	DESCRIPTION
Q804,Q806	30-2096-TR	BC556B
INTEGRATED CIRCUIT		
IC401-IC402	30-3391	NJM2037
MISCELLANEDUS		
SW1	31-1275	SW PUSH SPJ242NE01-FL
SW2	31-1276	SW PUSH SPJ222NE01-FL
SW3	31-1079F	SW SLIDE SSB23FL025
SW4	31-1345	SW ROT SRSO26N02-FL
SW5	31-1346	SW ROT SRSO46N02-FL
SW6-SW8	31-1354	SW PUSH SPUF31AE34-FL
VR401-VR402	VR03-F08101B	SR 100 OHM 8ø
VR501-VR502	VR03-F08501B	SR 500 OHM 8ø
VR503	29-4286	VR 10KB CENTER SHORT 16ø
VR504	29-4285	VR10KB CENTER OPEN 16ø
VR505	29-4288	VR 10KB
VR506	29-4071F	VR 50KNN 16ø
	12-2077	PHONE JACK
	12-2092	SOCKET RCA 4P
	12-2092-1	SOCKET RCA 4P GOLDING
	12-2093	SOCKET RCA 6P
	12-2167	SCOCKET RCA 6P GOLDING
	11-5077	HEAT SINK
	11-5087	HEAT SINK
	31-2044	LAMP 6.3V 150MA
	31-1366	POWER SW UL CSA
	31-1292	POWER SW PUSH ESB-90702V
	17-2011	CAP CER 4700pF 125VAC UL/CSA
	17-2014	CAP CER 4700pF 400VAC KC
	13-4039	CAP BOOTS
	29-2133-1	XFMR PW EI-54 120V CSA
	29-2133-2	XFMR PW EI-54 110V LC
	29-2133-4	XFMR PW EI-54 120V UL
	29-2133-5	XFMR PW EI-54 220V DNSF
	29-2133-2	XFMR PW EI-54 225/240V
	29-2133-7	XFMR PW EI-54 225/240V
	14-5061	POWER CORD SPT-2 #16 PLUG W/P
	14-5062	POWER CORD SPT-2 #16 PLUG W/P
	14-5033	POWER CORD 2X 0.75SQMM PLUG DNSF
	14-5025	POWER CORD 3X 0.75SQMM UK
	14-5013	POWER CORD 3X 0.75SQMM PLUG SAA
	14-5060	POWER CORD 2X 0.75SQMM PLUG DNS
	14-5005	CORD BUSHING 5N-4
	14-5003	CORD BUSHING 4N-4
	11-3025	LUG FUSE HOLDER
	11-3022	LUG FUSE HOLDER
	31-1351	SW SLIDE
	12-2193	RECEPTACLE UL/CSA AC-T05FB13
	12-2194	RECEPTACLE UL/CSA AC-T01FB33
	32-12000W	FUSE 6.3 x 32MM UL CSA SLOW 200MA
	32-11000S	FUSE 5 x 20MM SEMKO SLOW 100MA
* L401-L404	29-1175	COIL 3.7mH +-20%
	19-1399	PCB
	19-1400	PCB

The components identified by mark * are for E5 area only.
The R443-R444 have to be replaced by L403-L404 on E5 area.

MECHANICAL PARTS LIST

ITEM	PART NO.	DESCRIPTION	Q'TY
1	11-8374	FRONT PANEL	1
2	12-3195	KNOB B	1
3	12-3194	KNOB A	5
4	12-7042	BUSHING A	1
5	12-3193	PUSH KNOB	1
6	11-1961	SHIELD	1
7	12-7044	PW SW CONNECTOR	1
8	31-2044	LAMP	1
9	11-2403	BRACKET	1
10	11-2328*A	BRACKET HEADPHONES	1
11	12-7043	BUSHING B	1
12	28-2120	MASKER	6
13	15-5014	E RING	4
14	13-4027*A	TUBE FOR SHAFT	2
15	11-7080	SHAFT	2
16	12-7003*A	TUBE	2
17	11-6200	CHASSIS	2
18	29-2133	TRANSFORMER	1
19	13-4T04	FIBER	1
20	11-6216	BOTTOM COVER	1
21	28-2134	RETAINER	2
22	11-6201	CENTER CHASSIS	2
23	11-8375	BACK PANEL	1
24	N3.5B06I2.8SZ	NUT ST ZMC 3A	1
25	A3.5I07SZ01	G/W ST ZMC 3A	1
26	A3.5A09SN01	WASHER ST NI	1
27	15-2037*C	GROUND SCREW	1
28	12-3T02	POWER SW KNOB	2
29	12-2194	AC OUTLET	1
30	11-1T43	TOP COVER	1
31	11-6199	FRONT CHASSIS	1
32	28-1029	RUBBER FEET	4
33	15-2063	STAND SCREW	4
34	28-2090	RETAINER	6
35	15-2051*A	SPECIAL SCREW	6
36	12-3T08	KNOB PUSH SW BLACK	3
37	21-3056	LABEL SERIAL NO	1
38	15-2075	SPECIAL SCREW	6
39	S1B2.6+I04SL-2	SCREW	2
40	S2B03+I08SL-2	SCREW	13
41	S2B03+I06SL-2	SCREW	25
42	S1B03+I06SZ-2	SCREW	9
43	S2E03+I08SL-2	SCREW	5

ASSEMBLY DIAGRAM

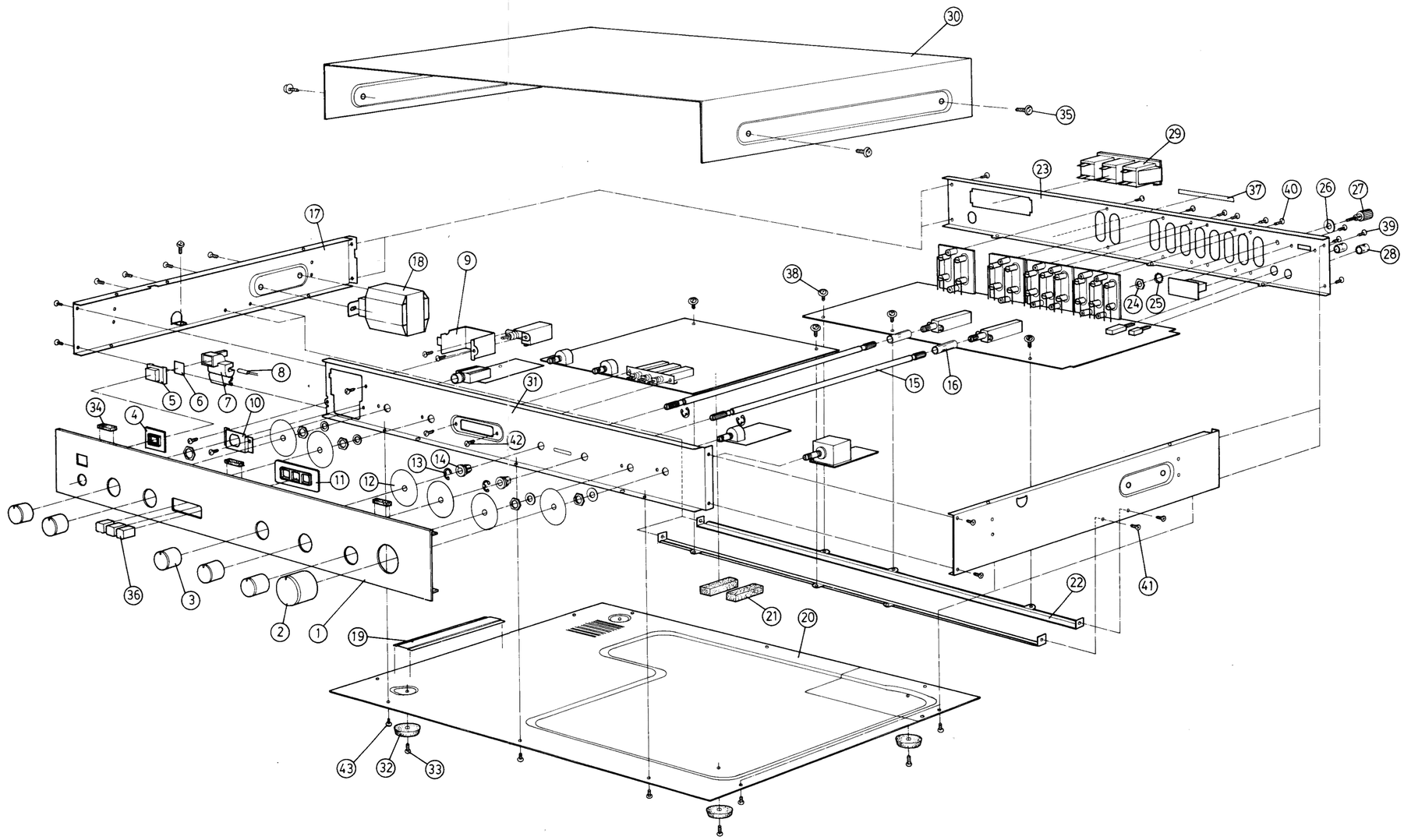

HANDLE ASSEMBLY DIAGRAM

ITEM	DESCRIPTION	PART NO.	QTY
1	FRONT PANEL H	11-8374-1	1
2	HANDLE	12-6011	2
3	HANDLE BASE L	12-6016	1
4	HANDLE BASE R	12-6015	1
5	BUSHING A	12-7042	1
6	BUSHING B	12-7043	1
7	SCREW	S1E04+I14SL-2	4

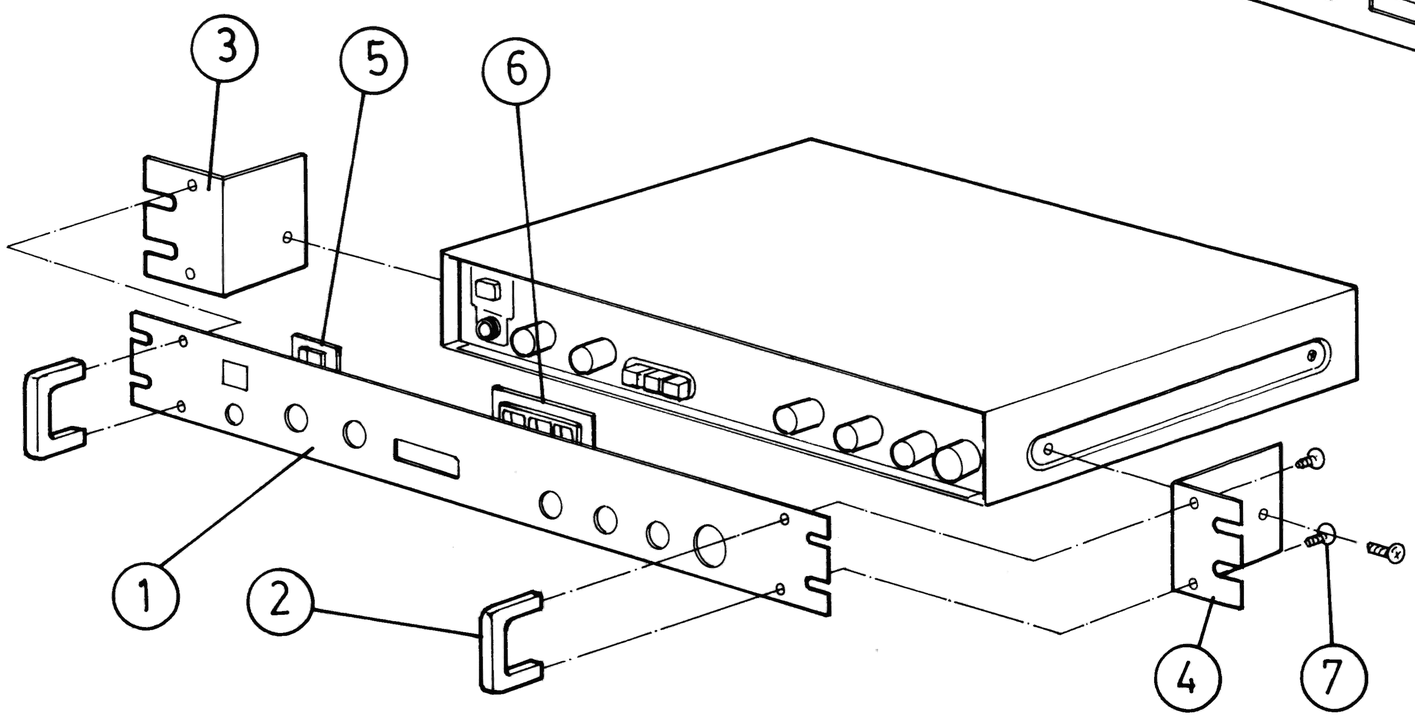

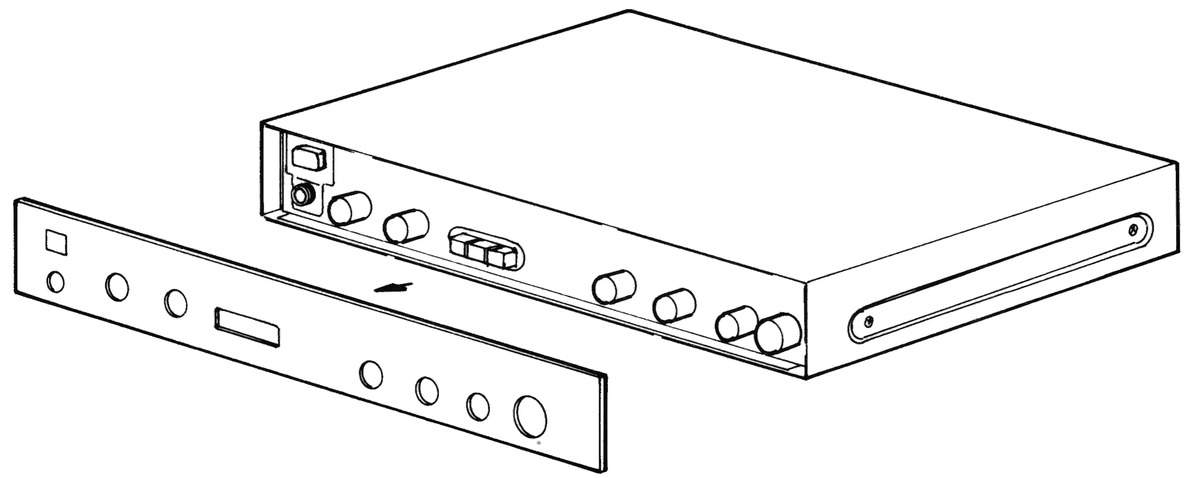

PACKING DIAGRAM

ITEM	DESCRIPTION	PART NO.	Q'TY
1	POLYLONE	34-1078	2
2	POLY PAPER	26-0005*B	1
3	WARRANTY CARD	21-3037*A	1
4	OWNER'S MANUAL	21-4141	1
5	RCA TO RCA CABLE	14-4331	1
6	POLY BAG MANUAL	26-2434*A	1
7	INNER CARTON	CT-5282	1

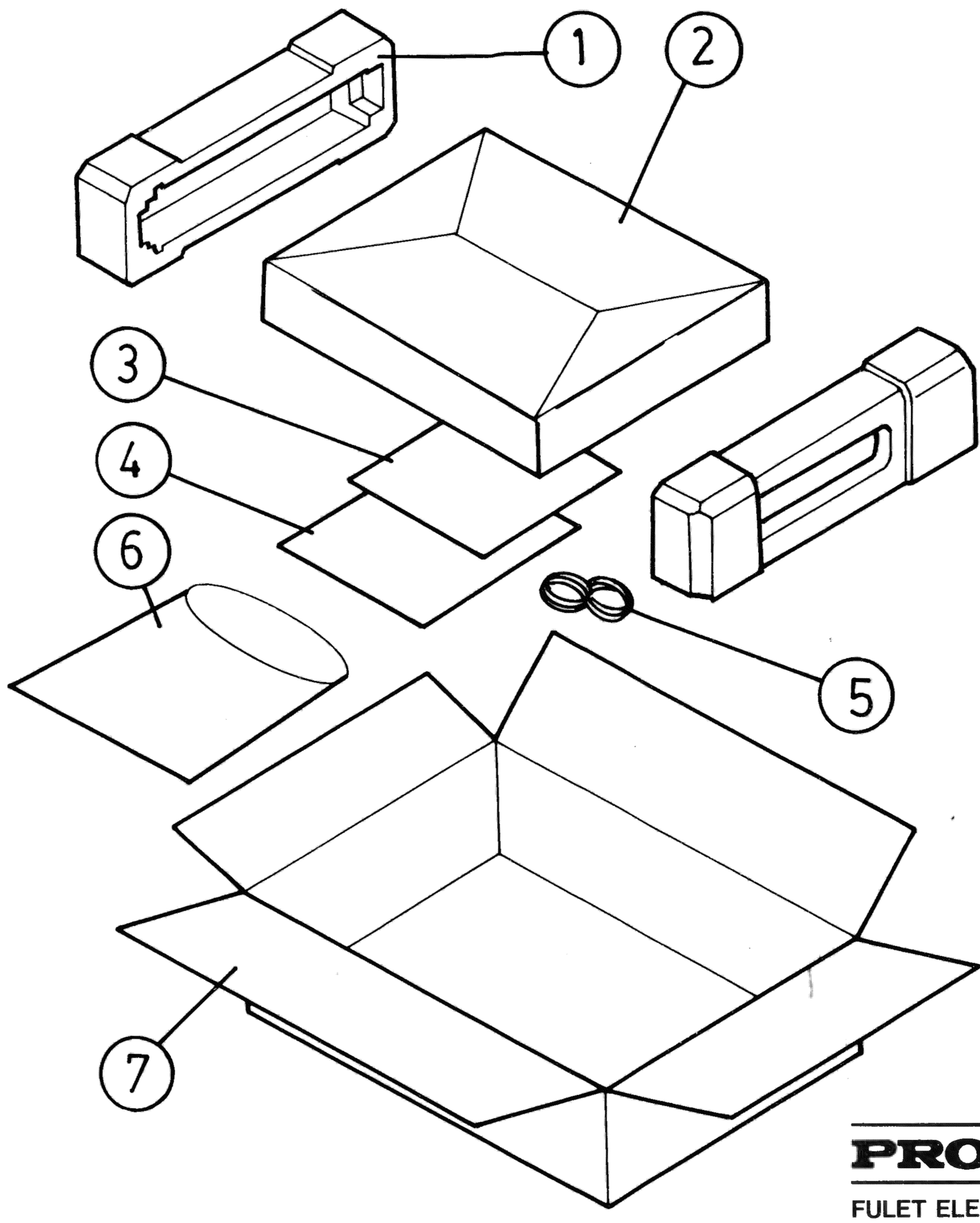

PROTON

FULET ELECTRONIC INDUSTRIAL CO., LTD.
63, Sec. 1, San Ming Rd., Panchiao, Taipei Hsien,
Taiwan, R.O.C.
Tel: (02)9625135-40

PROTON CORPORATION
737 West Artesia Blvd Compton CA. 90220
U.S.A.
Tel: (213) 638-5151

Printed in Taiwan