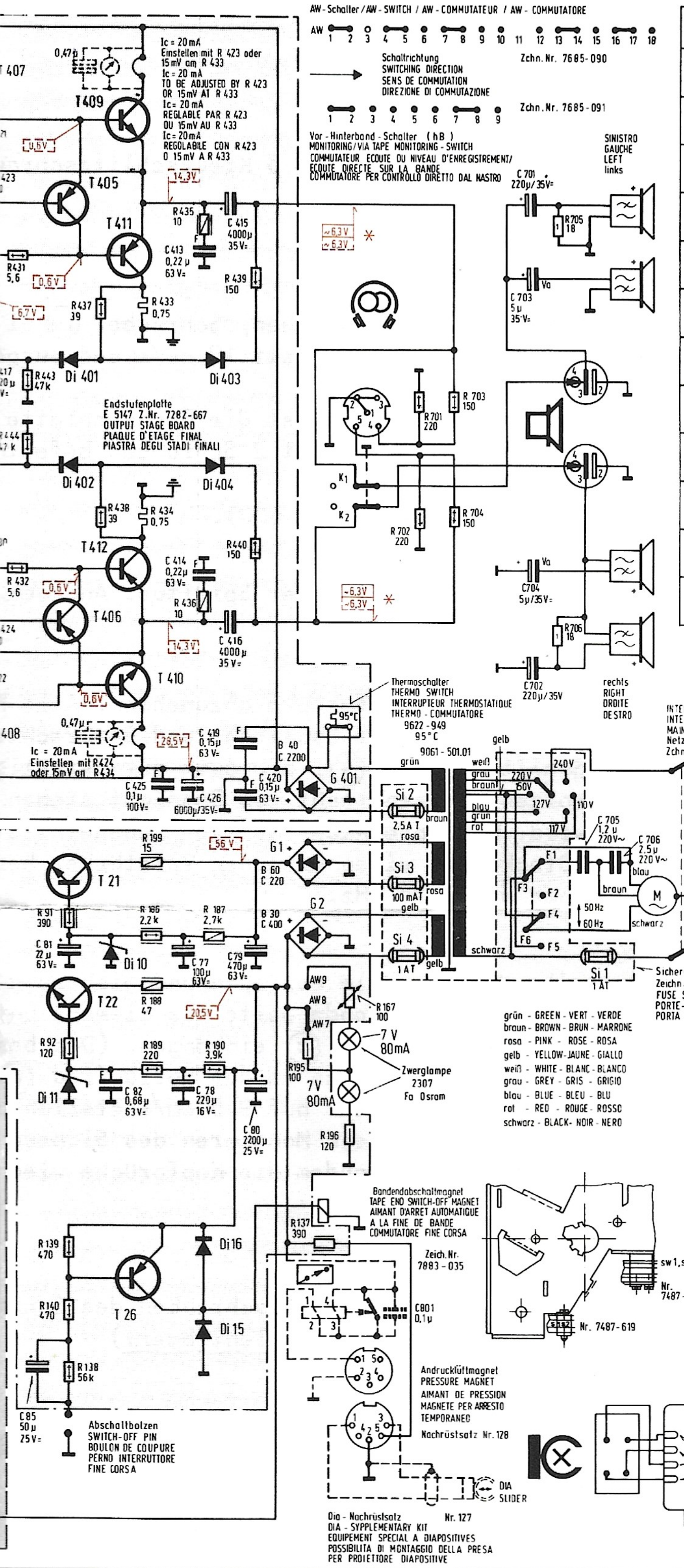


| Betriebsart / OPERATING POSITION / POSITION D'OPERATION / POSIZIONE DI FUNZIONAMENTO | Federsatze SPR. ASSEMBLY JEU DE RESS. GR.CONT.A MOLLA s1 / s2 | sw1 / sw2 | s3 | Schiebeschalter SILDER SWITCH COMMUTATEUR GLISSANT COMMUTATORE A CURSORE vA | vW | AW | hB | E | Spur 1-2 | Spur 3-4 | Stereo | RK |
|---|---|---|---|---|---|---|---|---|---|---|---|---|
| Halt / STOP / STOP / STOP | ● | × | × | | | × | × | | | | | |
| Pause / PAUSE / STOP MOMENTANE / PAUSA | ● | | × | | | | × | | | | | |
| Start / START / MARCHE / START | × | ● | ● | | | | | | | | | |
| Aufnahme / RECORDING / ENREGISTREMENT / REGISTRAZIONE | × | ○ | ● | | | ● | | | | | | |
| Aufnahme - Spur 1 / RECORDING - TRACK 1 / ENREGISTREMENT - PISTE 1 / REGISTRAZIONE - TRACCIA 1 | × | ○ | ● | | | ● | | | ● | × | × | ● |
| Aufnahme - Spur 2 / RECORDING - TRACK 2 / ENREGISTREMENT - PISTE 2 / REGISTRAZIONE - TRACCIA 2 | × | ○ | ● | | | ● | | | × | ● | × | ● |
| Aufnahme - Stereo / RECORDING - STEREO / ENREGISTREMENT - STEREO / REGISTRAZIONE - STEREO | × | ○ | ● | | | ● | | | × | × | ● | × |
| Hinter Band / VIA TAPE MONITORING / ECOUTE DIRECTE SUR LA BANDE / CONTROLLO DIRETTO DAL NASTRO | × | | ● | | | | ● | | | | | |
| Vor Band / MONITORING / ECOUTE DU NIVEAU D'ENREGISTREMENT / CONTROLLO TRAMITE AMPLIFICATORE | | | | | | | × | | | | | |
| Geschwindigkeit auf 19cm/s / SPEED AT 19cm/s / VITESSE SUR 19cm/s / VELOCITA SU 19cm/s | | | | × | × | | | | | | | |
| Mikro-Eingang / MICRO-INPUT / ENTREE-MICRO / ENTRATA-MICRO | | | | | | | | ● | | | | |

● wird betätigt / IS OPERATED / EST OPERE / VIENE COMANDATO

○ schließt Betätigung aus / EXCLUDES OPERATION / OPERATION EXCLUTE / ESCLUDE IL FUNZIONAMENTO

× wird wieder ausgelöst / IS RELEASTED AGAIN / EST DECLENCHE DE NOUVEAU / VIENE DI SINSERITO

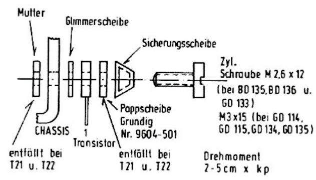


| | | |
|---|---|---|
| Di 1/2/3/4/14 | TD 300 | Texas |
| Di 5/6/7/8/15/16 | TD 30 | Texas |
| Di 10 | 7735 | Nortron |
| Di 11 | 5522 | Nortron |
| Di 201/202/203/204 | 9654 - 142 | |
| | BZ 102 2V 1h | Telefunken |
| Di 401/402 | AA 143 | SEL |
| Di 403/404 | TD 30 | Texas |

Leistungsaufnahme ohne Aussteuerung 50W
CURRENT CONSUMPTION WITHOUT MODULATION 50W
CONSOMMATION DE PUISSANCE SANS MODULATION 50W
ASSORBIMENTO REGISTRAZIONE SENZA PILOTAGGIO = 50W

Leistungsaufnahme mit Aussteuerung 110W
CURRENT CONSUMTION WITH MODULATION 110W
CONSOMMATION DE PUISSANCE AVEC MODULATION 110W
REGISTRAZIONE IN POTENZA CON PILOTAGGIO 110W
2 x 10W

Stromaufnahme ohne Aussteuerung 0,25 A
POWER CONSUMPTION WITHOUT MODULATION 0,25A
CONSOMMATION DE COURANT SANS MODULATION 0,25A
CORRENTE IN REGISTRAZIONE SENZA PILOTAGGIO = 0,25 A

Stromaufnahme mit Aussteuerung 0,55A
POWER CONSUMPTION WITH MODULATION 0,55A
CONSOMMATION DE COURANT AVEC MODULATION 0,55A
ASSORBIMENTO DI CORRENTE CON PILOTAGGIO 0,55A
2 x 10W

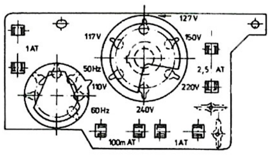


| Drehschalter Stellung / ROTATER SWITCH POSITION / POSITION DU COMMUTATEUR ROTATIF / POSIZIONE DEL COMMUTATORE A ROTAZIONE | | D 12,5 Manuell | D 10,6 Musik | D 11,7 Sprache |
|---|---|---|---|---|
| Aufnahme manuell / RECORDING MANUAL | ENREGISTREMENT MANUEL / REGISTRAZIONE MANUALE | ● | × | × |
| Aufnahme Musik / RECORDING MUSIC | ENREGISTREMENT MUSIQUE / REGISTRAZIONE MUSICA | × | ● | × |
| Aufnahme Sprache / RECORDING SPEECH | ENREGISTREMENT PAROLE / REGISTRAZIONE PARLATO | × | × | ● |

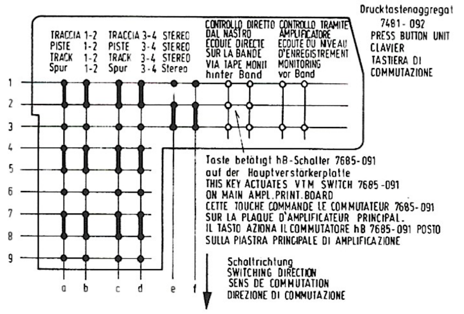


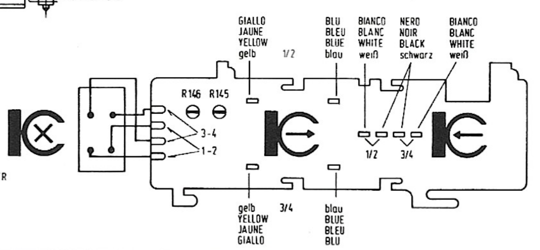


| | | | |
|---|---|---|---|
| T1/T2 | | BC 182 B/4 | Texas |
| | od. | BC 237 B | Siemens, Valvo, Telefunken |
| T3/T4/T15/T16, T401/T402/T203, T204/T205/T206 | | BC 214 B | Texas |
| | od. | GC 214 B | Motorola |
| | od. | BC 154 G | SGS |
| T5/T6 | | BC 109 B | Siemens, Valvo, Telefunken |
| | od. | BC 384 B | Texas |
| | od. | BC 239 B | Siemens, Valvo, Telefunken |
| T7/T8 | | BC 214 A | Texas |
| | od. | GC 214 A | Motorola |
| | od. | BC 154 A | SGS |
| T9/T10 | | BC 107 A | Siemens, Valvo, Telefunken |
| | od. | BC 182 A/4 | Texas |
| | od. | BC 237 A | Siemens, Valvo, Telefunken |
| T11/T12 | | BC 108 A | Siemens, Valvo, Telefunken |
| | od. | BC 183 A/2 | Texas |
| | od. | BC 238 A | Siemens, Valvo, Telefunken |
| T13/T14 | | BC 108 C | Siemens, Valvo, Telefunken |
| | od. | BC 183 C/2 | Texas |
| | od. | BC 238 C | Siemens, Valvo, Telefunken |
| T17/T18/, T301/T302 | | BC 107 B | Siemens, Valvo, Telefunken |
| | od. | BC 182 B/4 | Texas |
| | od. | BC 237 B | Siemens, Valvo, Telefunken |
| T19/T20 | | 9654 - 198 97 | GC 198 |
| T21/T22 | | BD 135 (B100-300) | Siemens, Valvo, Telefunken |
| | od. | BC 140 Gr.16 | Siemens |
| T23 | | BC 108 B | Siemens, Valvo, Telefunken |
| | od. | BC 183 B/2 | Texas |
| | od. | BC 238 B | Siemens, Valvo, Telefunken |
| T25 | | BC 232 A | Texas |
| T24 | | 9654 - 081.97 | |
| T26 | | 9654 - 208.97 | |
| T201/T202 | | 9654 - 146.97 | GC 146 |
| T207/T208 | | BC 384 C | Texas |
| | od. | BC 109 C | Siemens, Valvo, Telefunken |
| | od. | BC 239 C | Siemens, Valvo, Telefunken |
| T403/T404 | | BC 108 B | Siemens, Valvo |
| | od. | BC 183 B/2 | Texas |
| | od. | BC 238 B | Siemens, Valvo, Telefunken |
| T405/T406 | | 9654 - 133.31 | GD 133 |
| | | BD 136 (B40-120) | Telefunken, Siemens, Valvo |
| T407/T408 | | BD 135 (B100-300) | Siemens, Valvo, Telefunken |
| | od. | SJE 211 (grün) | Motorola |
| | | 2 Komplementarpaare | |
| T411/T412 | | 9654 - 134.25 | Texas, GD 134 |
| T409/T410 | und | 9654 - 135.25 | Texas, GD 135 |
| | od. | 2 Komplementärpaare | |
| T411/T412 | | 9654 - 114.31 | Motorola, GD 114 |
| T409/T410 | und | 9654 - 115.31 | Motorola, GD 115 |
| T413/T414 | | BC 223 B | Texas |
| | od. | GC 223 B | Ates |

85, 81, 82, 425, 426, 413, 414, 415, 416, 419, 420, 77, 78, 79, 80, 801, 701, 702, 703, 704, 705, 706. : C

…451, 452, 431, 432, 443, 444, 437, 438, 433, 434, 435, 436, 439, 440, 701, 702, 703, 704, 705, 706, …428, 429, 430, 91, 92, 138, 139, 140, 186, 188, 189, 199, 187, 190, 195, 137, 196, 167, 707. : R

…fenregler / …SS CONTROL / …GLAGE DES GRAUES / …GOLATORE DI BASSI

…henregler / …EBLE CONTROL / …GLAGE DES AIGUS / …GOLATORE DI ALTI

1/8 W
1/3 W
1/2 W
1 W
2 W Drahtwiderstand / WIRE - WOUND RESISTENC / RESISTANCE BOBINEE / RESISTENZA A FILO

nicht entflammbarer Widerstand / NON INFLAMMABLE RESISTOR / RESISTANCE NON INFLAMMABLE / RESISTENZA NON INFLAMMABILE

Ra Rauscharm / LOW NOISE LEVEL / A BRUIT REDUIT / A BASSO LIVELLO DI FRUSCIO

Va Verlustarm / LOW-LOSS / A FAIBLES PERTES / A SCARSE PERDITE

F Folien-Kondensator

S Styroflex-Kondensator

Elko

T Tantal-Elko

Änderungen vorbehalten!

ALTERATIONS RESERVED!

MODIFICATIONS RESERVEES!

CON RISERVA DI MODIFICA!

# Schaltbild
# CIRCUIT DIAGRAM
# SCHEMA
# SCHEMA

(39 - 5147 - 1000)